31 DESIGN FEATURES

The main design characteristics are:
- modularity
- space effective
- universal mounting
- high efficiency
- quite operation
- gears in hardened and case-hardened steel
- bare aluminium housing for sizes 05, 10, 20, 30, unpainted
  high strength painted cast-iron housings for larger frame sizes
- input and output shafts from high grade steel.

(C 25)

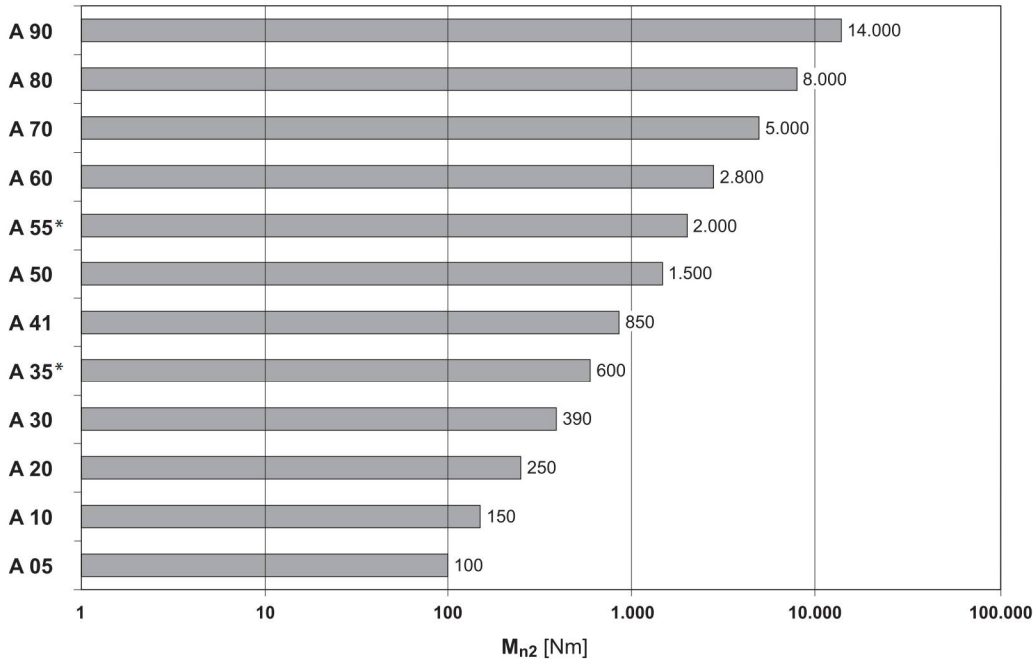

* For any limitations regarding construction type QF see the “VERSIONS” chapter.



32 VERSIONS

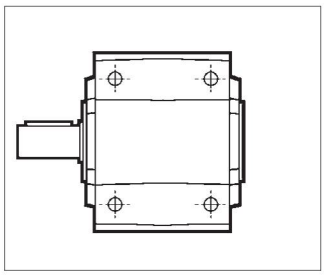

UR

Single extension output shaft

A 10 ... A 90

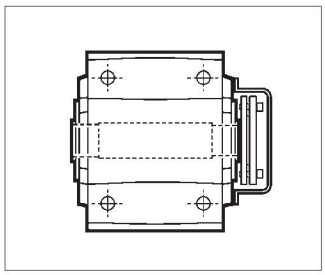

US

Hollow output shaft and shrink disc

A 05 ... A 90

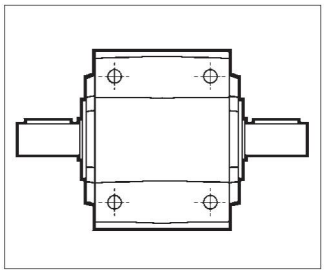

UD

Double extended output shaft

A 10 ... A 90

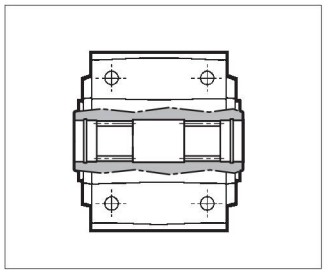

UV

Splined hollow shaft DIN 5480

A 20 ... A 60

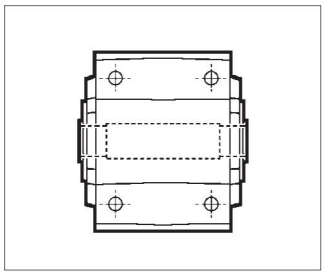

UH

Hollow output shaft and keyway

A 05 ... A 90

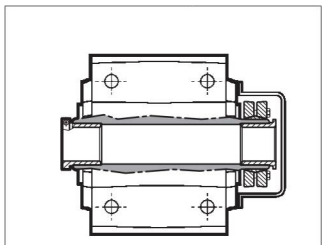

QF (Quick-fit)

Hollow shaft with adapter bushings and shrink disc

A 10 ... A 60

$M_{n2\ max}$ [Nm]	
A 35 QF35	550
A 55 QF55	1900

Basic versions with bolted flange

The sketches show the applicable flanges to the basic versions and their positions, designated with either ① or ②.

UR F1... UR F2...

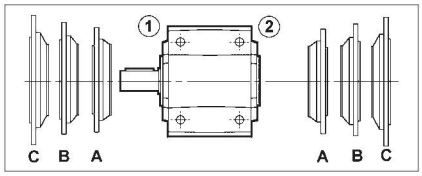

UD F1... UD F2...

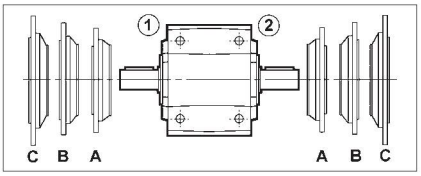

UH... F1... UH... F2...

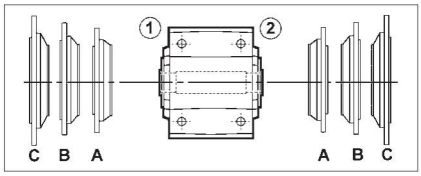

US F1... US F2...

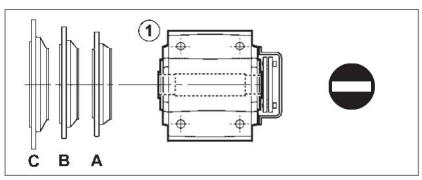

UV F1... UV F2...

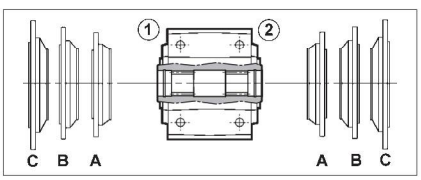

QF...

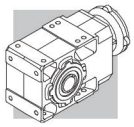

33 DESIGNATION

GEAR UNIT

A 35 2 UH40 F1A 33.2 S3 VA .....

OPTIONS 170

MOUNTING POSITION 175
B3 (Standard), **B6**, **B7**, **B8**, **VA**, **VB**

INPUT CONFIGURATION

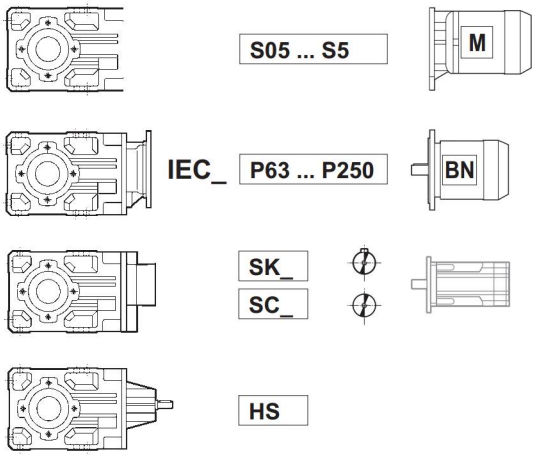

GEAR RATIO

OUTPUT FLANGE SIZE AND POSITION
(specify only if requested)
F = Flanged version
1, **2** = Flange position
A, **B**, **C** = Flange size

VERSION

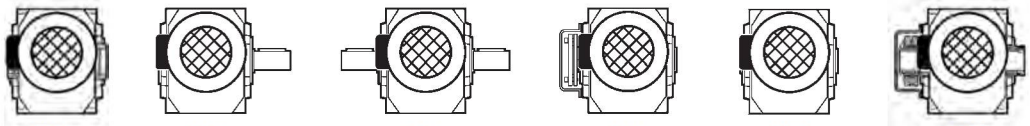

UH_	UR	UD	US	UV	QF
	(A 10...A 90)	(A 10...A 90)	(A 05...A 90)	(A 20...A 60)	(A 10...A 60)

A 05	A 10	A 20	A 30	A 35	A 41	A 50	A 55	A 60	A 70	A 80	A 90
UH25	**UH25**	**UH30**	**UH35**	**UH40**	**UH45**	**UH50**	**UH60**	**UH60**	**UH70**	**UH80**	**UH90**
—	UH30	UH35	UH40	UH35	UH40	UH55	UH50	UH70	UH80	UH90	UH100

REDUCTIONS
2 (A 05...A 60), **3** (A 20...A 90), **4** (A 50...A 90)

GEAR FRAME SIZE
05, **10**, **20**, **30**, **35**, **41**, **50**, **55**, **60**, **70**, **80**, **90**

TYPE: **A** = Helical bevel gear units

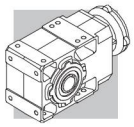

MOTOR | BRAKE

M 1LA 4 230/400-50 IP54 CLF ..... **W FD** 7.5 R SB 220 SA .....

OPTIONS — 173

BRAKE SUPPLY — 529 533 537

RECTIFIER TYPE
AC/DC
NB, **SB**, **NBR**, **SBR** — 529 533

BRAKE HAND RELEASE
R, **RM** — 539

BRAKE TORQUE — 530 534 537

BRAKE TYPE
FD, **AFD** (d.c. brake)
FA (a.c. brake) — 528 532 536

TERMINAL BOX POSITION
W (default), **N**, **E**, **S** — 175

MOTOR MOUNTING
— (compact motor)
B5 (IEC - motor)

INSULATION CLASS
CL F standard
CL H option — 522

DEGREE OF PROTECTION
IP55 standard (IP54 - brake motor) — 517

VOLTAGE - FREQUENCY — 520

POLE NUMBER
2, **4**, **6**, **2/4**, **2/6**, **2/8**, **2/12**, **4/6**, **4/8**

MOTOR SIZE
0B ... 5LA (compact motor)
63A ... 280M (IEC motor)

MOTOR TYPE
M = compact 3-phase
BN = IEC 3-phase

33.1 Gearbox options

AL, AR

On request the gear unit can be provided complete with a backstop device allowing the output shaft to rotate only in the direction specified at the time of ordering. The following table shows the gearboxes in which the anti-run back device can be installed. Anti-run back device exclude RB option.

(C 26)

A 30 2*	**A 35 2*** ⛔ (5.4_11.8)	**A 41 2** ⛔ (5.2; 10.1)	**A 50 3**	**A 55 3**	**A 60 3**	**A 70 3**	**A 80 3**	**A 90 3**
			A 50 4	**A 55 4**	**A 60 4**	**A 70 4**	**A 80 4**	**A 90 4**

* The supply of the backstop will ban the configuration of servomotor adapters type S_60A, S_ 60B, S_80A.

When ordering the gear unit, the direction of free rotation must be specified through either the AR or the AL option (Table C27).

⚠ N.B. When the anti-run back device operates very frequently make sure that the torque backdriving the gearbox does not exceed 70% of the rated torque M_{n2} for the captioned gear unit.

(C 27)

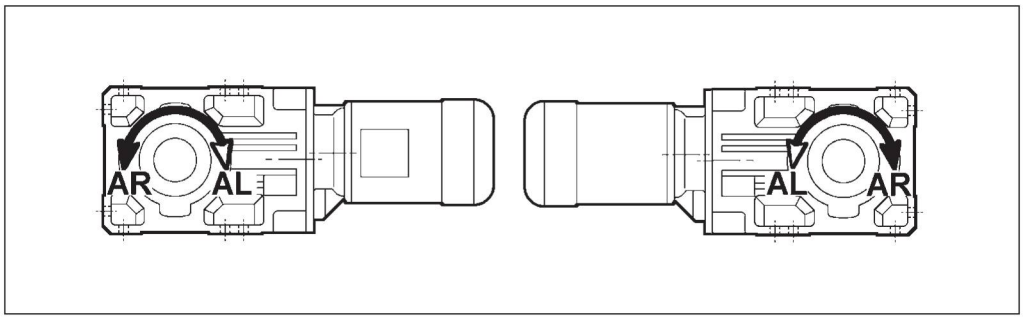

SO

Gear units A05, A10, A20, A30, A35 and A41, usually factory filled with oil, are, in this case, supplied unlubricated.

LO

Gearboxes A50, A55, A60, A70, A80 and A90, usually supplied without oil, to be supplied with synthetic oil currently used by BONFIGLIOLI RIDUTTORI and filled according to the mounting position specified.

DV

Dual oil seals on input shaft. (Only available for integral gearmotors).

VV

Fluoro elastomer oil seal on input shaft.

PV

All oil seals in Fluoro elastomer material.

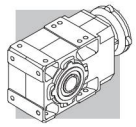

TKL

Taconite seals are available, for output axis of gearboxes sizes (from) A70 to A90, to use in environments characterized by the presence of abrasive dust or powders. Taconite seals incorporate a combination of sealing rings, labyrinths and a grease chamber.
Greasing must be ensured as part of the scheduled maintenance programme.
This option includes fluoro elastomer oil seals on all axes.
For mounting position B6 please consult Bonfiglioli's Technical service.

HDB

Certain gearboxes are available with increased overhung load ratings for use in applications characterised by high overhung loads beyond the capacity of the standard gearboxes. Specify the HDB option when ordering to obtain this increased overhung load capacity. The HDB option is available for gearbox sizes A10 to A50 with a single sided or through solid output shaft.
The following table specifies the maximum loads for HDB reinforced gearbox versions.
Figures refer to forces along the centreline of the output shaft.

(C 28)

HDB	R_{N2}					
	A 10	A 20	A 30	A 35	A 41	A 50
n_1 = 2800	**5500 N**	**6200 N**	**9600 N**	**12000 N**	**15000 N**	**20000 N**
⚠			8970 N @ i=5.4	10200 N @ i=5.4 10600 N @ i=6.4 11000 N @ i=7.0	11500 N @ i=5.2 12700 N @ i=7.1 13300 N @ i=8.3 13700 N @ i=9.2	19000 N @ i=7.7
n_1 = 1400	**5500 N**	**6200 N**	**9600 N**	**12000 N**	**15000 N**	**20000 N**
n_1 = 900	**5500 N**	**6200 N**	**9600 N**	**12000 N**	**15000 N**	**20000 N**
n_1 = 500	**5500 N**	**6200 N**	**9600 N**	**12000 N**	**15000 N**	**20000 N**

Reinforced bearings also allow these versions to withstand increased thrust loads, and in particular.

$$A_{N2} = 0.35 \times R_{n2} \quad (24)$$

In applications free from overhung load, thrust load capacity increases to:

$$A_{N2} = 0.70 \times R_{n2} \quad (25)$$

If load is applied simultaneously to both ends of a through output shaft, contact the Bonfiglioli Technical Service to verify the application.

RB

Gear units A10, A20, A30, A35, A41, A50, A55 and A60, usually supplied with standard values of angular backlash, are, in this case, supplied with reduced angular backlash values (excludes gear units options AL and AR described in this paragraph).
The following table specifies the corresponding figures of angular backlash.

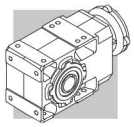

(C 29)

		standard		RB	
A05	i =	5.5_12.3 - ⛀(10.6)	10.6_91.6 - ⛀(12.3)	—	
	φ	**28**	**18**		
A10	i =	5.5_12.3 - ⛀(10.6)	10.6_91.6 - ⛀(12.3)	5.5_12.3 - ⛀(10.6)	10.6_91.6 - ⛀(12.3)
	φ	**27**	**17**	**12**	**8**
A20	i =	5.4_12 - ⛀(10.3)	10.3_380.9 - ⛀(12)	5.4_12 - ⛀(10.3)	10.3_380.9 - ⛀(12)
	φ	**23**	**15**	**11**	**7**
A30	i =	5.4_11.8 - ⛀(10.5)	10.5_400.8 - ⛀(11.8)	5.4_11.8 - ⛀(10.5)	10.5_400.8 - ⛀(11.8)
	φ	**22**	**15**	**10**	**7**
A35	i =	5.4_11.8	13.1_393.2	5.4_11.8	13.1_393.2
	φ	**20**	**11**	**9**	**6**
A41	i =	5.2_11.7 - ⛀(10.1)	10.1_376.8 - ⛀(11.7)	5.2-11.7 - ⛀(10.1)	10.1_376.8 - ⛀(11.7)
	φ	**19**	**13**	**9**	**6**
A50	i =	7.7_778.2		7.7_778.2	
	φ	**16**		**7**	
A55	i =	4.9_19.2	23.8_793	4.9_19.2	23.8_793
	φ	**17**	**11**	**8**	**6**
A60	i =	7.9_20.6	25.7_755.4	7.9_20.6	25.7_755.4
	φ	**12**	**9**	**5**	**4**
A70	i =	9.4_21.3	23.5_1715	—	
	φ	**14**	**12**		
A80	i =	9.8_20.9	22.6_1558	—	
	φ	**13**	**11**		
A90	i =	9.7_21	22.3_1632	—	
	φ	**12**	**10**		

For the delivery timeframe contact the Bonfiglioli's sales network

SURFACE PROTECTION

When no specific protection class is requested, the painted (ferrous) surfaces of gearboxes are protected to at least corrosivity class C2 (UNI EN ISO 12944-2). For improved resistance to atmospheric corrosion, gearboxes can be delivered with **C3** and **C4** surface protection, obtained by painting the complete gearbox.

(C 30)

SURFACE PROTECTION	Typical environments	Maximum surface temperature	Corrosivity class according to UNI EN ISO 12944-2
C3	Urban and industrial environments with up to 100% relative humidity (medium air pollution)	120°C	C3
C4	Industrial areas, coastal areas, chemical plant, with up to 100% relative humidity (high air pollution)	120°C	C4

Gearboxes with optional protection to class **C3** or **C4** are available in a choice of colours.
If no specific colour is requested (see the "PAINTING" option) gearboxes are finished in RAL 7042.
Gearboxes can also be supplied with surface protection for corrosivity class **C5** according to UNI EN ISO 12944-2. Contact our Technical Service for further details.

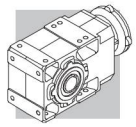

PAINTING

Gearboxes with optional protection to class C3 or C4 are available in the colours listed in the following table.

(C 31)

PAINTING	Colour	RAL number
RAL7042*	Traffic Grey A	7042
RAL5010	Gentian Blue	5010
RAL9005	Jet Black	9005
RAL9006	White Aluminium	9006
RAL9010	Pure White	9010

* Gearboxes are supplied in this standard colour if no other colour is specified.

NOTE – “PAINTING” options can only be specified in conjunction with “SURFACE PROTECTION” options.

CERTIFICATES

AC - Certificate of compliance
The document certifies the compliance of the product with the purchase order and the construction in conformity with the applicable procedures of the Bonfiglioli Quality System.

CC - Inspection certificate
The document entails checking on order compliance, the visual inspection of external conditions and of mating dimensions. Checking on main functional parameters in unloaded conditions is also performed along with oil seal proofing, both in static and in running conditions. Units inspected are sampled within the shipping batch and marked individually.

33.2 Accessories

See chapter 45 of this catalogue.

33.3 Motor options

AA, AC, AD
Angular position of the brake release lever with respect to the terminal box, looking from fan side.
Standard position = 90° clockwise.
AA = 0°, AC = 180°,
AD = 90° counterclockwise.

(C 32)

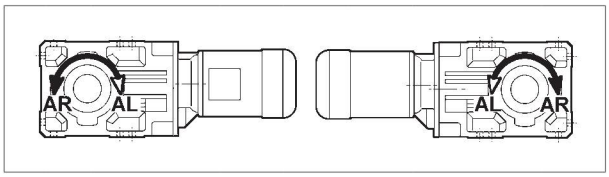

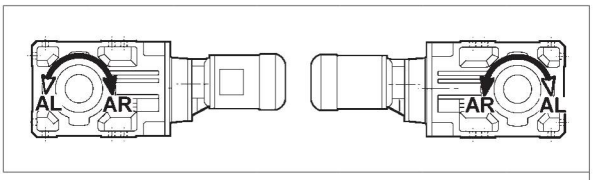

2x	A 05	A 10	A 20	A 30	A 35	A 41	A 50	A 60
3x	A 60	A 70	A 80	A 90				
4x	A 50	A 55						

2x	A 55					
3x	A 20	A 30	A 35	A 41	A 50	A 55
4x	A 60	A 70	A 80	A 90		

AL, AR
A backstop device on the motor itself, as described in the electric motors section of this catalogue, is available for gearmotors with integral M Series motors. The following table shows the direction of free rotation of the gearbox, on the basis of which the correct option must be selected.

CF
Capacitive filter.

D3
3 bimetallic winding temperature sensors, calibrated at 150°C.

E3
3 winding temperature thermistors, calibrated at 150°C.

F1
Flywheel for soft start and stop.

H1
Anti condensate heaters. Standard voltage 1~ 230V ±10%.

PN
60 Hz power corresponding to the normalized 50 Hz power.

PS
Double shaft extention (barring RC and U1 options).

RC
Drip cover (barring option PS).

RV
Rotor balancing in vibration class B.

TC
Option TC is a rain canopy variant for textile industry environments. This option is not compatible with variants EN_ and will not fit motors equipped with a BA brake.

TP
Tropicalization.

U1
Forced cooling (barring options PS and CUS).

U2
Separate supply forced ventilation without terminal box. Cables are pre-wired.Configuration is not compatible with options PS and CUS. Available on motors; BN 71 ... BN 132, M1 ... M4.

For further information on options, consult the electric motors section.

34 LUBRICATION

The inner parts of Bonfiglioli gear units are oil-bath and splash lubricated.
Frame sizes A 05, A 10, A 20, A 30, A 35 and A 41 are supplied by the factory, or by the authorized dealers, already filled with oil.
Unless otherwise specified, units size A 50 and larger are usually supplied unlubricated at it will be the customer care to fill them with oil prior to putting them into operation.
In both cases, depending on the version, prior to putting the gear unit into operation may need to replace the closed plug used for transportation purposes with breather plug supplied with.
For the reference charts of oil plugs placement and quantity of lubricant, refer to the Installation, Operation and Maintenance Manual (available on www.bonfiglioli.com).
The “long life” poliglycol-based lubricant supplied by the factory, in the absence of contamination, does not require periodical oil changes throughout the life of the gear unit.
Operation of gear units is permitted at ambient temperatures between -20°C and +40°C. However, for temperatures between -20°C and -10°C unit may only start up after it has been progressively and evenly pre-heated, or otherwise initially operated unloaded.
Load may then be connected to the output shaft when the gear unit has reached the temperature of -10°C, or higher.

35 MOUNTING POSITION AND TERMINAL BOX ANGULAR LOCATION

Location of motor terminal box can be specified by viewing the motor from the fan side; standard location is shown in black (W).

Angular location of the brake release lever.
Unless otherwise specified, brake motors have the manual device side located, 90° apart from terminal box. Different angles can be specified through the relevant options available.

(C 33)

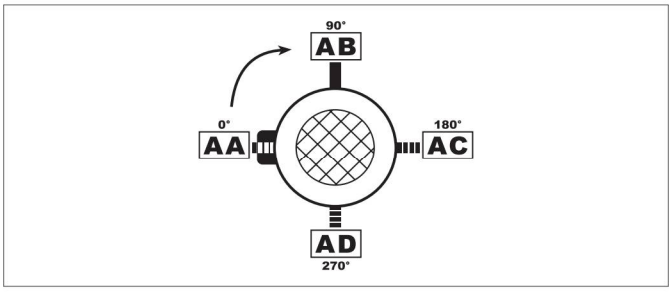

A ...

B3

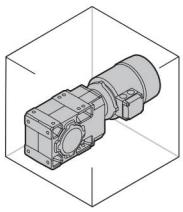
_S

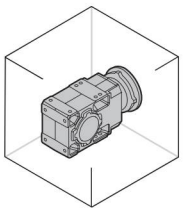
_P(IEC) _SK / _SC

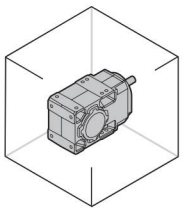
_HS

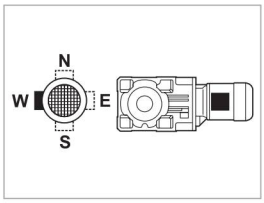

B6

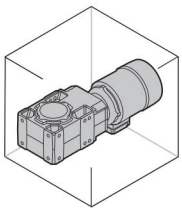
_S

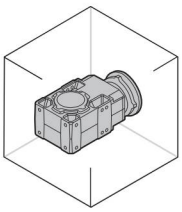
_P(IEC) _SK / _SC

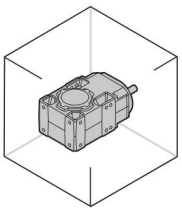
_HS

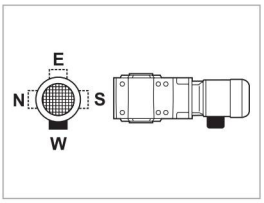

B7

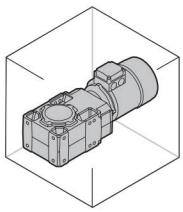
_S

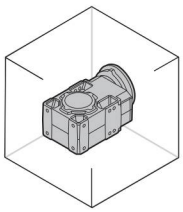
_P(IEC) _SK / _SC

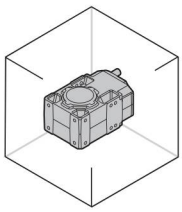
_HS

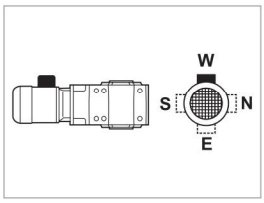

B8

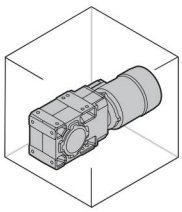
_S

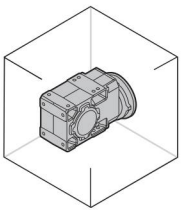
_P(IEC) _SK / _SC

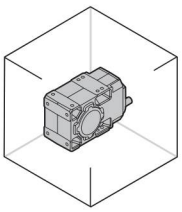
_HS

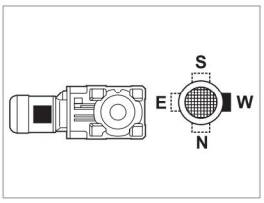

VA

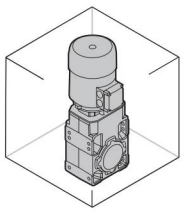
_S

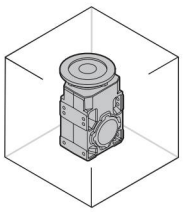
_P(IEC) _SK / _SC

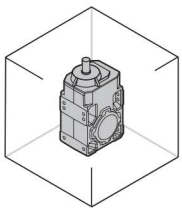
_HS

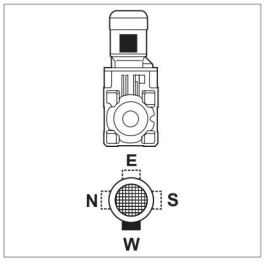

VB

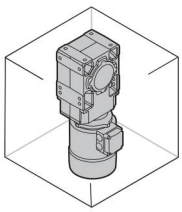
_S

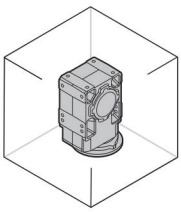
_P(IEC) _SK / _SC

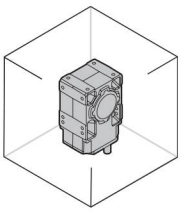
_HS



W = Default

36 OVERHUNG LOADS

External transmissions keyed onto input and/or output shaft generate loads that act radially onto same shaft.
Resulting shaft loading must be compatible with both the bearing and the shaft capacity. Namely shaft loading (R_{c1} for input shaft, R_{c2} for output shaft), must be equal or lower than admissible overhung load capacity for shaft under study (R_{n1} for input shaft, R_{n2} for output shaft). OHL capability listed in the rating chart section.
In the formulas given below, index (1) applies to parameters relating to input shaft, whereas index (2) refers to output shaft.
The load generated by an external transmission can be calculated with close approximation by the following equations:

$$R_{c1}[N] = \frac{2000 \cdot M_1[Nm] \cdot K_r}{d\,[mm]} \quad ; \quad R_{c2}[N] = \frac{2000 \cdot M_2[Nm] \cdot K_r}{d\,[mm]} \qquad (26)$$

(C 34)

M_1 [Nm]	Torque applied to input shaft
M_2 [Nm]	Torque drawn at output shaft
d [mm]	Pitch diameter of element keyed onto shaft
K_r = 1	Chain transmission

K_r = 1,25	Gear transmission
K_r = 1,5	V-belt transmission
K_r = 2,0	Flat belt transmission

Verification of OHL capability varies depending on whether load applies at midpoint of shaft or it is shifted further out:

(C 35)

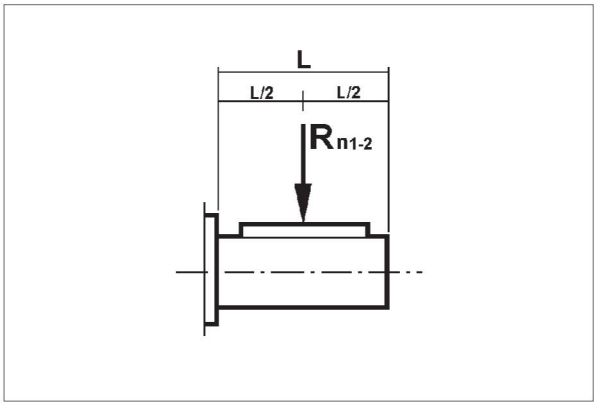

(C 36)

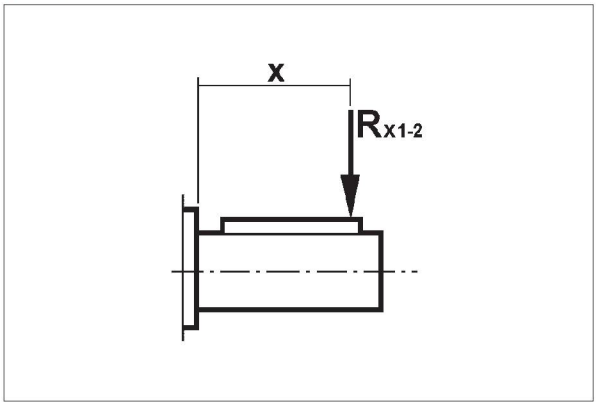

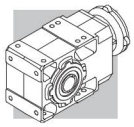

a) Load applied at midpoint of shaft, tab. (C35)

A comparison of shaft loading with catalogue OHL ratings should verify the following condition:

$R_{c1} \leq R_{n1}$ [input shaft]

or

$R_{c2} \leq R_{n2}$ [output shaft]

b) Load off the midpoint tab. (C36)

When load is shifted at an “x” distance from shaft shoulder, permissible load must be calculated for that distance.
Revised permissible overhung loads R_{x1} (input) and R_{x2} (output) are calculated respectively from original rated values R_{n1} and R_{n2} through factor:

$$\frac{a}{b+x} \qquad (27)$$

(C 37)

	Load location factors					
	Output shaft			Input shaft		
	a	**b**	**c**	**a**	**b**	**c**
A 05 2	116	86	450	—	—	—
A 10 2	123	101	600	21	1	300
A 20 2	150	120	750	40	20	350
A 20 3	150	120	750	21	1	300
A 30 2	168	138	900	38.5	18.5	350
A 30 3	168	138	900	21	1	300
A 35 2	182.5	147.5	950	38.5	18.5	350
A 35 3	182.5	147.5	950	21	1	300
A 41 2	198	158	1050	49.5	24.5	450
A 41 3	198	158	1050	40	20	350
A 50 2 - A 50 3	242.5	201.5	1300	49.5	24.5	450
A 50 4	242.5	201.5	1300	38.5	18.5	350
A 55 2 - A 55 3	231.5	179	1300	49.5	24.5	450
A 55 4	231.5	179	1300	38.5	18.5	350
A 60 2 - A 60 3	242.5	190	1550	55.5	25.5	600
A 60 4	242.5	190	1550	49.5	24.5	450
A 70 3	295.5	230.5	1900	86	31	1000
A 70 4	295.5	230.5	1900	49.5	24.5	450
A 80 3	345	280	2400	86	31	1000
A 80 4	345	280	2400	49.5	24.5	450
A 90 3	432	327	3000	116	46	1400
A 90 4	432	327	3000	49.5	24.5	450

Verification procedure is described here after.

INPUT SHAFT

1. Calculate:

$$R_{x1} = R_{n1} \cdot \frac{a}{b + x} \quad (28)$$

N.B. Subject to condition:

$$\frac{L}{2} \leq x \leq c \quad (29)$$

Finally, the following condition must be verified:

$$R_{c1} \leq R_{x1} \quad (30)$$

OUTPUT SHAFT

1. Calculate:

$$R_{x2} = R_{n2} \cdot \frac{a}{b + x} \quad (31)$$

N.B. Subject to condition:

$$\frac{L}{2} \leq x \leq c \quad (32)$$

Finally, the following condition must be verified:

$$R_{c2} \leq R_{x2} \quad (33)$$

37 THRUST LOADS, A_{n1}, A_{n2}

Permissible thrust loads on input [A_{n1}] and output [A_{n2}] shafts are obtained from the radial loading for the shaft under consideration [R_{n1}] and [R_{n2}] through the following equation:

$$A_{n1} = R_{n1} \cdot 0.2$$
$$A_{n2} = R_{n2} \cdot 0.2 \qquad (34)$$

The thrust loads calculated through these formulas apply to thrust forces occurring at the same time as rated radial loads.
In the only case that no overhung load acts on the shaft the value of the admissible thrust load [A_n] amounts to 50% of rated OHL [R_n] on same shaft.
Where thrust loads exceed permissible value or largely prevail over radial loads, contact Bonfiglioli Riduttori for an in-depth analysis of the application.

38 SHAFTS ARRANGEMENT

The following table shows standard directions of rotation for 2, 3 and 4 stage helical-bevel gearboxes.

(C 38)

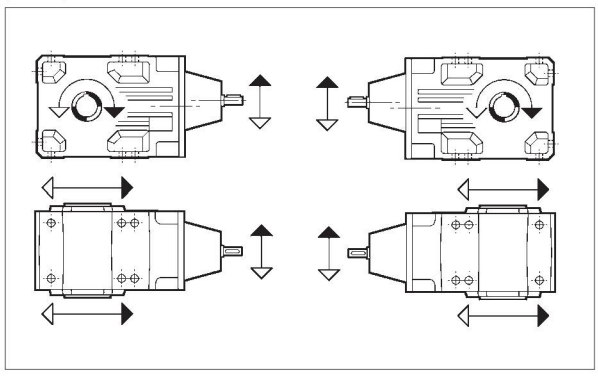

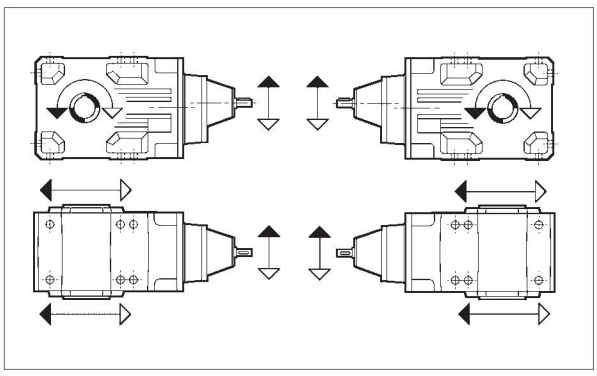

2x	A 05	A 10	A 20	A 30	A 35	A 41	A 50	A 60
3x	A 60	A 70	A 80	A 90				
4x	A 50	A 55						

2x	A 55					
3x	A 20	A 30	A 35	A 41	A 50	A 55
4x	A 60	A 70	A 80	A 90		

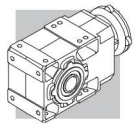

39 GEARMOTOR RATING CHARTS

0.09 kW

n_2 min^{-1}	M_2 Nm	S	i	R_{n2} N			IEC	
0.51	1492	3.4	1715	50000			**A704_1715 P63 BN63A6**	309
1.1	677	2.2	778.2	20000			**A504_778.2 P63 BN63A6**	297
1.2	616	2.4	707.9	20000			**A504_707.9 P63 BN63A6**	297
1.4	549	2.7	631.2	20000			**A504_631.2 P63 BN63A6**	297
1.5	499	3.0	574.2	20000			**A504_574.2 P63 BN63A6**	297
1.7	461	3.3	529.5	20000			**A504_529.5 P63 BN63A6**	297
2.2	356	1.0	400.8	9600	**A303_400.8 S05 M05A6**	284	**A303_400.8 P63 BN63A6**	285
2.6	302	1.7	339.3	12000	**A353_339.3 S05 M05A6**	288	**A353_339.3 P63 BN63A6**	289
3.0	259	3.3	291.7	15000	**A413_291.7 S05 M05A6**	292	**A413_291.7 P63 BN63A6**	293
3.5	221	2.7	248.1	12000	**A353_248.1 S05 M05A6**	288	**A353_248.1 P63 BN63A6**	289
4.1	193	2.1	216.6	9600	**A303_216.6 S05 M05A6**	284	**A303_216.6 P63 BN63A6**	285
4.9	159	1.6	178.3	6200	**A203_178.3 S05 M05A6**	280	**A203_178.3 P63 BN63A6**	281
5.8	134	2.8	150.7	9600	**A303_150.7 S05 M05A6**	284	**A303_150.7 P63 BN63A6**	285
6.8	115	2.2	129.1	6200	**A203_129.1 S05 M05A6**	280	**A203_129.1 P63 BN63A6**	281
8.1	97	2.5	109.2	6200	**A203_109.2 S05 M05A6**	280	**A203_109.2 P63 BN63A6**	281
9.6	84	1.5	91.6	5500	**A102_91.6 S05 M05A6**	276	**A102_91.6 P63 BN63A6**	277
11.5	70	2.1	76.4	5500	**A102_76.4 S05 M05A6**	276	**A102_76.4 P63 BN63A6**	277
13.3	61	2.5	65.9	5500	**A102_65.9 S05 M05A6**	276	**A102_65.9 P63 BN63A6**	277
15.0	54	2.8	58.6	5500	**A102_58.6 S05 M05A6**	276	**A102_58.6 P63 BN63A6**	277
17.2	47	3.2	51.3	5500	**A102_51.3 S05 M05A6**	276	**A102_51.3 P63 BN63A6**	277
19.4	42	2.4	45.4	4250	**A052_45.4 S05 M05A6**	273	**A052_45.4 P63 BN63A6**	273
21.5	38	2.7	40.9	4120	**A052_40.9 S05 M05A6**	273	**A052_40.9 P63 BN63A6**	273
25.1	32	3.1	35.1	3950	**A052_35.1 S05 M05A6**	273	**A052_35.1 P63 BN63A6**	273
27.3	30	3.4	32.2	3850	**A052_32.2 S05 M05A6**	273	**A052_32.2 P63 BN63A6**	273
31	26	3.8	28.6	3720	**A052_28.6 S05 M05A6**	273	**A052_28.6 P63 BN63A6**	273
35	23	4.4	25.5	3590	**A052_25.5 S05 M05A6**	273	**A052_25.5 P63 BN63A6**	273
37	22	4.6	23.8	3520	**A052_23.8 S05 M05A6**	273	**A052_23.8 P63 BN63A6**	273
41	19.6	5.3	21.4	3410	**A052_21.4 S05 M05A6**	273	**A052_21.4 P63 BN63A6**	273
47	17.1	5.9	18.6	3270	**A052_18.6 S05 M05A6**	273	**A052_18.6 P63 BN63A6**	273
53	15.1	6.8	16.4	3150	**A052_16.4 S05 M05A6**	273	**A052_16.4 P63 BN63A6**	273
63	12.8	7.8	13.9	2990	**A052_13.9 S05 M05A6**	273	**A052_13.9 P63 BN63A6**	273
72	11.3	8.8	12.3	2880	**A052_12.3 S05 M05A6**	273	**A052_12.3 P63 BN63A6**	273
83	9.7	10.3	10.6	2740	**A052_10.6 S05 M05A6**	273	**A052_10.6 P63 BN63A6**	273
92	8.8	11.3	9.6	2670	**A052_9.6 S05 M05A6**	273	**A052_9.6 P63 BN63A6**	273
103	7.8	13.2	8.5	2570	**A052_8.5 S05 M05A6**	273	**A052_8.5 P63 BN63A6**	273
122	6.6	15.1	7.2	2440	**A052_7.2 S05 M05A6**	273	**A052_7.2 P63 BN63A6**	273
139	5.8	17.8	6.3	2340	**A052_6.3 S05 M05A6**	273	**A052_6.3 P63 BN63A6**	273
161	5.0	19.9	5.5	2230	**A052_5.5 S05 M05A6**	273	**A052_5.5 P63 BN63A6**	273

0.12 kW

n_2 min^{-1}	M_2 Nm	S	i	R_{n2} N			IEC	
0.51	2012	2.5	1715	50000			**A704_1715 P63 BN63B6**	309
0.55	1857	2.7	1583	50000			**A704_1583 P63 BN63B6**	309
0.65	1579	3.2	1346	50000			**A704_1346 P63 BN63B6**	309
0.70	1457	3.4	1242	50000			**A704_1242 P63 BN63B6**	309

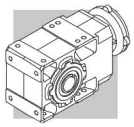

0.12 kW

n_2 min^{-1}	M_2 Nm	S	i	R_{n2} N			IEC	
1.1	913	1.6	778.2	20000			**A504_778.2 P63 BN63B6**	297
1.2	818	3.4	697.3	30000			**A604_697.3 P63 BN63B6**	305
1.4	740	2.0	631.2	20000			**A504_631.2 P63 BN63B6**	297
1.6	621	2.4	529.5	20000			**A504_529.5 P63 BN63B6**	297
1.7	588	2.5	778.2	20000			**A504_778.2 P63 BN63A4**	297
1.9	535	2.8	707.9	20000			**A504_707.9 P63 BN63A4**	297
2.1	477	3.1	631.2	20000			**A504_631.2 P63 BN63A4**	297
2.4	434	3.5	574.2	20000			**A504_574.2 P63 BN63A4**	297
3.4	310	1.2	400.8	9600	**A303_400.8 S05 M05A4**	284	**A303_400.8 P63 BN63A4**	285
3.4	304	1.5	393.2	12000	**A353_393.2 S05 M05A4**	288	**A353_393.2 P63 BN63A4**	289
3.6	291	2.9	376.8	15000	**A413_376.8 S05 M05A4**	292	**A413_376.8 P63 BN63A4**	293
3.8	275	1.3	356.3	9600	**A303_356.3 S05 M05A4**	284	**A303_356.3 P63 BN63A4**	285
4.0	262	2.0	339.3	12000	**A353_339.3 S05 M05A4**	288	**A353_339.3 P63 BN63A4**	289
4.1	255	1.0	329.4	6200	**A203_329.4 S05 M05A4**	280	**A203_329.4 P63 BN63A4**	281
4.2	251	3.4	324.2	15000	**A413_324.2 S05 M05A4**	292	**A413_324.2 P63 BN63A4**	293
4.3	243	1.6	314.5	9600	**A303_314.5 S05 M05A4**	284	**A303_314.5 P63 BN63A4**	285
4.4	236	2.5	305.4	12000	**A353_305.4 S05 M05A4**	288	**A353_305.4 P63 BN63A4**	289
4.6	226	1.1	292.8	6200	**A203_292.8 S05 M05A4**	280	**A203_292.8 P63 BN63A4**	281
5.0	210	1.8	271.5	9600	**A303_271.5 S05 M05A4**	284	**A303_271.5 P63 BN63A4**	285
5.0	209	2.9	270.7	12000	**A353_270.7 S05 M05A4**	288	**A353_270.7 P63 BN63A4**	289
5.2	201	1.2	260.5	6200	**A203_260.5 S05 M05A4**	280	**A203_260.5 P63 BN63A4**	281
5.4	192	3.1	248.1	12000	**A353_248.1 S05 M05A4**	288	**A353_248.1 P63 BN63A4**	289
5.5	189	2.0	244.3	9600	**A303_244.3 S05 M05A4**	284	**A303_244.3 P63 BN63A4**	285
6.0	172	3.5	223.2	12000	**A353_223.2 S05 M05A4**	288	**A353_223.2 P63 BN63A4**	289
6.1	171	1.5	221.3	6200	**A203_221.3 S05 M05A4**	280	**A203_221.3 P63 BN63A4**	281
6.2	167	2.2	216.6	9600	**A303_216.6 S05 M05A4**	284	**A303_216.6 P63 BN63A4**	285
6.8	154	1.6	199.2	6200	**A203_199.2 S05 M05A4**	280	**A203_199.2 P63 BN63A4**	281
6.8	153	2.3	198.5	9600	**A303_198.5 S05 M05A4**	284	**A303_198.5 P63 BN63A4**	285
7.6	138	2.5	178.5	9600	**A303_178.5 S05 M05A4**	284	**A303_178.5 P63 BN63A4**	285
7.6	138	1.8	178.3	6200	**A203_178.3 S05 M05A4**	280	**A203_178.3 P63 BN63A4**	281
8.3	126	1.9	163.4	6200	**A203_163.4 S05 M05A4**	280	**A203_163.4 P63 BN63A4**	281
8.4	125	2.7	161.4	9600	**A303_161.4 S05 M05A4**	284	**A303_161.4 P63 BN63A4**	285
9.0	116	2.8	150.7	9600	**A303_150.7 S05 M05A4**	284	**A303_150.7 P63 BN63A4**	285
9.2	113	2.0	146.1	6200	**A203_146.1 S05 M05A4**	280	**A203_146.1 P63 BN63A4**	281
9.8	106	3.0	137.4	9600	**A303_137.4 S05 M05A4**	284	**A303_137.4 P63 BN63A4**	285
10.5	100	2.2	129.1	6200	**A203_129.1 S05 M05A4**	280	**A203_129.1 P63 BN63A4**	281
11.2	93	2.3	120.5	6200	**A203_120.5 S05 M05A4**	280	**A203_120.5 P63 BN63A4**	281
11.2	93	3.2	120.5	9600	**A303_120.5 S05 M05A4**	284	**A303_120.5 P63 BN63A4**	285
12.4	84	2.4	109.2	6200	**A203_109.2 S05 M05A4**	280	**A203_109.2 P63 BN63A4**	281
14.6	74	2.7	92.3	6200	**A202_92.3 S05 M05A4**	280	**A202_92.3 P63 BN63A4**	281
14.7	73	1.4	91.6	4420	**A052_91.6 S05 M05A4**	273	**A052_91.6 P63 BN63A4**	273
14.7	73	1.8	91.6	5500	**A102_91.6 S05 M05A4**	276	**A102_91.6 P63 BN63A4**	277
16.9	64	3.3	79.9	6200	**A202_79.9 S05 M05A4**	280	**A202_79.9 P63 BN63A4**	281
17.7	61	1.6	76.4	4230	**A052_76.4 S05 M05A4**	273	**A052_76.4 P63 BN63A4**	273
17.7	61	2.5	76.4	5500	**A102_76.4 S05 M05A4**	276	**A102_76.4 P63 BN63A4**	277
20.5	53	1.9	65.9	4070	**A052_65.9 S05 M05A4**	273	**A052_65.9 P63 BN63A4**	273
20.5	53	2.8	65.9	5500	**A102_65.9 S05 M05A4**	276	**A102_65.9 P63 BN63A4**	277
23.0	47	2.1	58.6	3950	**A052_58.6 S05 M05A4**	273	**A052_58.6 P63 BN63A4**	273
23.0	47	3.2	58.6	5500	**A102_58.6 S05 M05A4**	276	**A102_58.6 P63 BN63A4**	277
26.3	41	2.4	51.3	3810	**A052_51.3 S05 M05A4**	273	**A052_51.3 P63 BN63A4**	273
29.7	36	2.8	45.4	3680	**A052_45.4 S05 M05A4**	273	**A052_45.4 P63 BN63A4**	273

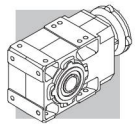

0.12 kW

n_2 min^{-1}	M_2 Nm	S	i	R_{n2} N	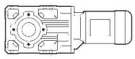		 IEC	
33	33	3.1	40.9	3570	**A052_40.9 S05 M05A4**	273	**A052_40.9 P63 BN63A4**	273
38	28	3.6	35.1	3420	**A052_35.1 S05 M05A4**	273	**A052_35.1 P63 BN63A4**	273
42	26	3.9	32.2	3340	**A052_32.2 S05 M05A4**	273	**A052_32.2 P63 BN63A4**	273
47	23	4.4	28.6	3220	**A052_28.6 S05 M05A4**	273	**A052_28.6 P63 BN63A4**	273
53	20	4.9	25.5	3110	**A052_25.5 S05 M05A4**	273	**A052_25.5 P63 BN63A4**	273
57	19	5.3	23.8	3050	**A052_23.8 S05 M05A4**	273	**A052_23.8 P63 BN63A4**	273
62	17.3	5.8	13.9	2960	**A052_13.9 S05 M05B6**	273	**A052_13.9 P63 BN63B6**	273
63	17.1	5.9	21.4	2950	**A052_21.4 S05 M05A4**	273	**A052_21.4 P63 BN63A4**	273
73	14.8	6.7	18.6	2830	**A052_18.6 S05 M05A4**	273	**A052_18.6 P63 BN63A4**	273
82	13.1	7.6	16.4	2730	**A052_16.4 S05 M05A4**	273	**A052_16.4 P63 BN63A4**	273
90	11.9	8.4	9.6	2640	**A052_9.6 S05 M05B6**	273	**A052_9.6 P63 BN63B6**	273
97	11.1	9.0	13.9	2590	**A052_13.9 S05 M05A4**	273	**A052_13.9 P63 BN63A4**	273
110	9.8	10.2	12.3	2500	**A052_12.3 S05 M05A4**	273	**A052_12.3 P63 BN63A4**	273
121	8.9	11.2	7.2	2420	**A052_7.2 S05 M05B6**	273	**A052_7.2 P63 BN63B6**	273
128	8.4	11.9	10.6	2380	**A052_10.6 S05 M05A4**	273	**A052_10.6 P63 BN63A4**	273
140	7.7	13.0	9.6	2310	**A052_9.6 S05 M05A4**	273	**A052_9.6 P63 BN63A4**	273
159	6.8	14.7	8.5	2220	**A052_8.5 S05 M05A4**	273	**A052_8.5 P63 BN63A4**	273
187	5.8	17.4	7.2	2110	**A052_7.2 S05 M05A4**	273	**A052_7.2 P63 BN63A4**	273
213	5.1	19.8	6.3	2020	**A052_6.3 S05 M05A4**	273	**A052_6.3 P63 BN63A4**	273
247	4.4	21.8	5.5	1930	**A052_5.5 S05 M05A4**	273	**A052_5.5 P63 BN63A4**	273

0.18 kW

n_2 min^{-1}	M_2 Nm	S	i	R_{n2} N	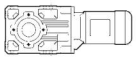		 IEC	
0.52	2917	1.7	1715	50000	**A704_1715 S1 M1SC6**	308	**A704_1715 P71 BN71A6**	309
0.58	2649	3.0	1558	65000	**A804_1558 S1 M1SC6**	311	**A804_1558 P71 BN71A6**	312
0.67	2279	3.5	1340	65000	**A804_1340 S1 M1SC6**	311	**A804_1340 P71 BN71A6**	312
0.77	1989	2.5	1715	50000			**A704_1715 P63 BN63B4**	309
0.83	1836	2.7	1583	50000			**A704_1583 P63 BN63B4**	309
0.98	1561	3.2	1346	50000			**A704_1346 P63 BN63B4**	309
1.1	1441	3.5	1242	50000			**A704_1242 P63 BN63B4**	309
1.3	1186	2.4	697.3	30000	**A604_697.3 S1 M1SC6**	304	**A604_697.3 P71 BN71A6**	305
1.5	996	2.8	585.8	30000	**A604_585.8 S1 M1SC6**	304	**A604_585.8 P71 BN71A6**	305
1.7	902	1.7	778.2	20000			**A504_778.2 P63 BN63B4**	297
1.7	876	3.2	755.4	30000			**A604_755.4 P63 BN63B4**	305
1.9	821	1.8	707.9	20000			**A504_707.9 P63 BN63B4**	297
1.9	809	3.5	697.3	30000			**A604_697.3 P63 BN63B4**	305
2.1	732	2.0	631.2	20000			**A504_631.2 P63 BN63B4**	297
2.3	666	2.3	574.2	20000			**A504_574.2 P63 BN63B4**	297
2.5	614	2.4	529.5	20000			**A504_529.5 P63 BN63B4**	297
2.7	559	2.7	481.6	20000			**A504_481.6 P63 BN63B4**	297
3.0	518	2.9	446.8	20000			**A504_446.8 P63 BN63B4**	297
3.2	471	3.2	406.4	20000			**A504_406.4 P63 BN63B4**	297
3.4	466	1.0	393.2	12000	**A353_393.2 S05 M05B4**	288	**A353_393.2 P63 BN63B4**	289
3.5	447	1.9	376.8	15000	**A413_376.8 S05 M05B4**	292	**A413_376.8 P63 BN63B4**	293
3.6	424	3.5	365.6	20000			**A504_365.6 P63 BN63B4**	297
3.7	422	0.9	356.3	9600	**A303_356.3 S05 M05B4**	284	**A303_356.3 P63 BN63B4**	285
3.9	402	1.3	339.3	12000	**A353_339.3 S05 M05B4**	288	**A353_339.3 P63 BN63B4**	289

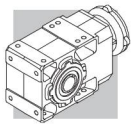

0.18 kW

n_2 min^{-1}	M_2 Nm	S	i	R_{n2} N			IEC	
4.1	384	2.2	324.2	15000	**A413_324.2 S05 M05B4**	292	**A413_324.2 P63 BN63B4**	293
4.2	373	1.0	314.5	9600	**A303_314.5 S05 M05B4**	284	**A303_314.5 P63 BN63B4**	285
4.3	362	1.7	305.4	12000	**A353_305.4 S05 M05B4**	288	**A353_305.4 P63 BN63B4**	289
4.5	346	2.5	291.7	15000	**A413_291.7 S05 M05B4**	292	**A413_291.7 P63 BN63B4**	293
4.9	322	1.2	271.5	9600	**A303_271.5 S05 M05B4**	284	**A303_271.5 P63 BN63B4**	285
4.9	321	1.9	270.7	12000	**A353_270.7 S05 M05B4**	288	**A353_270.7 P63 BN63B4**	289
5.0	311	2.7	262.5	15000	**A413_262.5 S05 M05B4**	292	**A413_262.5 P63 BN63B4**	293
5.3	294	2.0	248.1	12000	**A353_248.1 S05 M05B4**	288	**A353_248.1 P63 BN63B4**	289
5.4	290	1.3	244.3	9600	**A303_244.3 S05 M05B4**	284	**A303_244.3 P63 BN63B4**	285
5.5	285	3.0	240.6	15000	**A413_240.6 S05 M05B4**	292	**A413_240.6 P63 BN63B4**	293
5.9	265	2.3	223.2	12000	**A353_223.2 S05 M05B4**	288	**A353_223.2 P63 BN63B4**	289
6.0	262	1.0	221.3	6200	**A203_221.3 S05 M05B4**	280	**A203_221.3 P63 BN63B4**	281
6.1	258	3.3	217.4	15000	**A413_217.4 S05 M05B4**	292	**A413_217.4 P63 BN63B4**	293
6.1	257	1.4	216.6	9600	**A303_216.6 S05 M05B4**	284	**A303_216.6 P63 BN63B4**	285
6.5	239	2.5	201.8	12000	**A353_201.8 S05 M05B4**	288	**A353_201.8 P63 BN63B4**	289
6.6	236	1.1	199.2	6200	**A203_199.2 S05 M05B4**	280	**A203_199.2 P63 BN63B4**	281
6.6	235	1.5	198.5	9600	**A303_198.5 S05 M05B4**	284	**A303_198.5 P63 BN63B4**	285
7.0	223	2.7	188.3	12000	**A353_188.3 S05 M05B4**	288	**A353_188.3 P63 BN63B4**	289
7.4	212	1.6	178.5	9600	**A303_178.5 S05 M05B4**	284	**A303_178.5 P63 BN63B4**	285
7.4	211	1.2	178.3	6200	**A203_178.3 S05 M05B4**	280	**A203_178.3 P63 BN63B4**	281
7.7	204	2.9	171.8	12000	**A353_171.8 S05 M05B4**	288	**A353_171.8 P63 BN63B4**	289
8.1	194	1.2	163.4	6200	**A203_163.4 S05 M05B4**	280	**A203_163.4 P63 BN63B4**	281
8.2	191	1.8	161.4	9600	**A303_161.4 S05 M05B4**	284	**A303_161.4 P63 BN63B4**	285
8.8	179	1.8	150.7	9600	**A303_150.7 S05 M05B4**	284	**A303_150.7 P63 BN63B4**	285
8.8	179	3.4	150.6	12000	**A353_150.6 S05 M05B4**	288	**A353_150.6 P63 BN63B4**	289
9.0	173	1.3	146.1	6200	**A203_146.1 S05 M05B4**	280	**A203_146.1 P63 BN63B4**	281
9.6	163	1.9	137.4	9600	**A303_137.4 S05 M05B4**	284	**A303_137.4 P63 BN63B4**	285
10.2	153	1.4	129.1	6200	**A203_129.1 S05 M05B4**	280	**A203_129.1 P63 BN63B4**	281
11.0	143	1.5	120.5	6200	**A203_120.5 S05 M05B4**	280	**A203_120.5 P63 BN63B4**	281
11.0	143	2.1	120.5	9600	**A303_120.5 S05 M05B4**	284	**A303_120.5 P63 BN63B4**	285
12.1	129	1.6	109.2	6200	**A203_109.2 S05 M05B4**	280	**A203_109.2 P63 BN63B4**	281
12.1	129	2.3	109.1	9600	**A303_109.1 S05 M05B4**	284	**A303_109.1 P63 BN63B4**	285
13.5	119	2.5	97.5	9600			**A302_97.5 P63 BN63B4**	285
14.3	113	1.8	92.3	6200	**A202_92.3 S05 M05B4**	280	**A202_92.3 P63 BN63B4**	281
14.4	112	0.9	91.6	4120	**A052_91.6 S05 M05B4**	273	**A052_91.6 P63 BN63B4**	273
14.4	112	1.2	91.6	5500	**A102_91.6 S05 M05B4**	276	**A102_91.6 P63 BN63B4**	277
15.2	106	3.0	86.7	9600			**A302_86.7 P63 BN63B4**	285
16.5	98	2.1	79.9	6200	**A202_79.9 S05 M05B4**	280	**A202_79.9 P63 BN63B4**	281
17.3	94	1.1	76.4	3980	**A052_76.4 S05 M05B4**	273	**A052_76.4 P63 BN63B4**	273
17.3	94	1.6	76.4	5500	**A102_76.4 S05 M05B4**	276	**A102_76.4 P63 BN63B4**	277
18.6	87	2.4	71.0	6200	**A202_71.0 S05 M05B4**	280	**A202_71.0 P63 BN63B4**	281
20.0	81	1.2	65.9	3860	**A052_65.9 S05 M05B4**	273	**A052_65.9 P63 BN63B4**	273
20.0	81	1.9	65.9	5500	**A102_65.9 S05 M05B4**	276	**A102_65.9 P63 BN63B4**	277
20.9	77	3.2	63.1	6200	**A202_63.1 S05 M05B4**	280	**A202_63.1 P63 BN63B4**	281
22.5	72	1.4	58.6	3760	**A052_58.6 S05 M05B4**	273	**A052_58.6 P63 BN63B4**	273
22.5	72	2.1	58.6	5500	**A102_58.6 S05 M05B4**	276	**A102_58.6 P63 BN63B4**	277
25.8	63	1.6	51.3	3640	**A052_51.3 S05 M05B4**	273	**A052_51.3 P63 BN63B4**	273
25.8	63	2.4	51.3	5500	**A102_51.3 S05 M05B4**	276	**A102_51.3 P63 BN63B4**	277
29.1	56	1.8	45.4	3540	**A052_45.4 S05 M05B4**	273	**A052_45.4 P63 BN63B4**	273
29.1	56	2.7	45.4	5500	**A102_45.4 S05 M05B4**	276	**A102_45.4 P63 BN63B4**	277
32	50	2.0	40.9	3440	**A052_40.9 S05 M05B4**	273	**A052_40.9 P63 BN63B4**	273

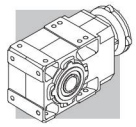

0.18 kW

n_2 min^{-1}	M_2 Nm	S	i	R_{n2} N	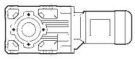		 IEC	
32	50	3.0	40.9	5500	**A102_40.9 S05 M05B4**	276	**A102_40.9 P63 BN63B4**	277
38	43	2.3	35.1	3310	**A052_35.1 S05 M05B4**	273	**A052_35.1 P63 BN63B4**	273
38	43	3.5	35.1	5380	**A102_35.1 S05 M05B4**	276	**A102_35.1 P63 BN63B4**	277
41	39	2.5	32.2	3240	**A052_32.2 S05 M05B4**	273	**A052_32.2 P63 BN63B4**	273
46	35	2.9	28.6	3130	**A052_28.6 S05 M05B4**	273	**A052_28.6 P63 BN63B4**	273
52	31	3.2	25.5	3040	**A052_25.5 S05 M05B4**	273	**A052_25.5 P63 BN63B4**	273
56	29	3.4	23.8	2980	**A052_23.8 S05 M05B4**	273	**A052_23.8 P63 BN63B4**	273
62	26	3.8	21.4	2890	**A052_21.4 S05 M05B4**	273	**A052_21.4 P63 BN63B4**	273
71	23	4.4	18.6	2780	**A052_18.6 S05 M05B4**	273	**A052_18.6 P63 BN63B4**	273
80	20	5.0	16.4	2680	**A052_16.4 S05 M05B4**	273	**A052_16.4 P63 BN63B4**	273
95	17.1	5.9	13.9	2550	**A052_13.9 S05 M05B4**	273	**A052_13.9 P63 BN63B4**	273
107	15.1	6.6	12.3	2460	**A052_12.3 S05 M05B4**	273	**A052_12.3 P63 BN63B4**	273
125	12.9	7.7	10.6	2350	**A052_10.6 S05 M05B4**	273	**A052_10.6 P63 BN63B4**	273
137	11.8	8.5	9.6	2280	**A052_9.6 S05 M05B4**	273	**A052_9.6 P63 BN63B4**	273
142	11.4	8.8	6.3	2300	**A052_6.3 S1 M1SC6**	273	**A052_6.3 P71 BN71A6**	273
155	10.4	9.6	8.5	2200	**A052_8.5 S05 M05B4**	273	**A052_8.5 P63 BN63B4**	273
183	8.8	11.3	7.2	2090	**A052_7.2 S05 M05B4**	273	**A052_7.2 P63 BN63B4**	273
208	7.8	12.9	6.3	2010	**A052_6.3 S05 M05B4**	273	**A052_6.3 P63 BN63B4**	273
242	6.7	14.2	5.5	1920	**A052_5.5 S05 M05B4**	273	**A052_5.5 P63 BN63B4**	273
284	5.7	16.7	9.6	1830	**A052_9.6 S05 M05A2**	273	**A052_9.6 P63 BN63A2**	273
321	5.0	17.8	8.5	1770	**A052_8.5 S05 M05A2**	273	**A052_8.5 P63 BN63A2**	273
379	4.3	19.9	7.2	1670	**A052_7.2 S05 M05A2**	273	**A052_7.2 P63 BN63A2**	273
431	3.8	21.3	6.3	1610	**A052_6.3 S05 M05A2**	273	**A052_6.3 P63 BN63A2**	273
499	3.2	23.2	5.5	1530	**A052_5.5 S05 M05A2**	273	**A052_5.5 P63 BN63A2**	273

0.25 kW

n_2 min^{-1}	M_2 Nm	S	i	R_{n2} N	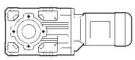		 IEC	
0.52	4051	1.2	1715	50000	**A704_1715 S1 M1SD6**	308	**A704_1715 P71 BN71B6**	309
0.58	3680	2.2	1558	65000	**A804_1558 S1 M1SD6**	311	**A804_1558 P71 BN71B6**	312
0.67	3165	2.5	1340	65000	**A804_1340 S1 M1SD6**	311	**A804_1340 P71 BN71B6**	312
0.80	2642	1.9	1715	50000			**A704_1715 P71 BN71A4**	309
0.87	2439	2.1	1583	50000			**A704_1583 P71 BN71A4**	309
0.89	2400	3.3	1558	65000			**A804_1558 P71 BN71A4**	312
1.0	2073	2.4	1346	50000			**A704_1346 P71 BN71A4**	309
1.1	1914	2.6	1242	50000			**A704_1242 P71 BN71A4**	309
1.2	1789	2.8	1161	50000			**A704_1161 P71 BN71A4**	309
1.3	1652	3.0	1072	50000			**A704_1072 P71 BN71A4**	309
1.5	1427	3.5	926.5	50000			**A704_926.5 P71 BN71A4**	309
1.8	1199	1.3	778.2	20000			**A504_778.2 P71 BN71A4**	297
1.8	1164	2.4	755.4	30000			**A604_755.4 P71 BN71A4**	305
1.9	1091	1.4	707.9	20000			**A504_707.9 P71 BN71A4**	297
2.0	1074	2.6	697.3	30000			**A604_697.3 P71 BN71A4**	305
2.2	978	2.9	634.6	30000			**A604_634.6 P71 BN71A4**	305
2.2	972	1.5	631.2	20000			**A504_631.2 P71 BN71A4**	297
2.4	902	3.1	585.8	30000			**A604_585.8 P71 BN71A4**	305
2.4	885	1.7	574.2	20000			**A504_574.2 P71 BN71A4**	297
2.5	835	3.4	542.0	30000			**A604_542.0 P71 BN71A4**	305

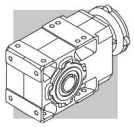

0.25 kW

n_2 min^{-1}	M_2 Nm	S	i	R_{n2} N			IEC	
2.6	816	1.8	529.5	20000			**A504_529.5 P71 BN71A4**	297
2.9	742	2.0	481.6	20000			**A504_481.6 P71 BN71A4**	297
3.1	688	2.2	446.8	20000			**A504_446.8 P71 BN71A4**	297
3.4	626	2.4	406.4	20000			**A504_406.4 P71 BN71A4**	297
3.6	611	1.4	376.8	15000	**A413_376.8 S05 M05C4**	292	**A413_376.8 P71 BN71A4**	293
3.8	563	2.7	365.6	20000			**A504_365.6 P71 BN71A4**	297
3.9	550	0.9	339.3	12000	**A353_339.3 S05 M05C4**	288	**A353_339.3 P71 BN71A4**	289
4.1	526	1.6	324.2	15000	**A413_324.2 S05 M05C4**	292	**A413_324.2 P71 BN71A4**	293
4.1	512	2.9	332.6	20000			**A504_332.6 P71 BN71A4**	297
4.4	495	1.2	305.4	12000	**A353_305.4 S05 M05C4**	288	**A353_305.4 P71 BN71A4**	289
4.7	460	1.8	291.7	15000	**A413_291.7 S05 M05C4**	292	**A413_291.7 P71 BN71A4**	293
4.8	442	3.4	286.8	20000			**A504_286.8 P71 BN71A4**	297
4.9	440	0.9	271.5	9600	**A303_271.5 S05 M05C4**	284	**A303_271.5 P71 BN71A4**	285
5.0	439	1.4	270.7	12000	**A353_270.7 S05 M05C4**	288	**A353_270.7 P71 BN71A4**	289
5.1	426	2.0	262.5	15000	**A413_262.5 S05 M05C4**	292	**A413_262.5 P71 BN71A4**	293
5.4	403	1.5	248.1	12000	**A353_248.1 S05 M05C4**	288	**A353_248.1 P71 BN71A4**	289
5.6	385	1.0	244.3	9600	**A303_244.3 S05 M05C4**	284	**A303_244.3 P71 BN71A4**	285
5.7	379	2.2	240.6	15000	**A413_240.6 S05 M05C4**	292	**A413_240.6 P71 BN71A4**	293
6.0	362	1.7	223.2	12000	**A353_223.2 S05 M05C4**	288	**A353_223.2 P71 BN71A4**	289
6.2	353	2.4	217.4	15000	**A413_217.4 S05 M05C4**	292	**A413_217.4 P71 BN71A4**	293
6.2	351	1.0	216.6	9600	**A303_216.6 S05 M05C4**	284	**A303_216.6 P71 BN71A4**	285
6.6	327	1.8	201.8	12000	**A353_201.8 S05 M05C4**	288	**A353_201.8 P71 BN71A4**	289
7.0	313	1.1	198.5	9600	**A303_198.5 S05 M05C4**	284	**A303_198.5 P71 BN71A4**	285
7.0	311	2.7	197.5	15000	**A413_197.5 S05 M05C4**	292	**A413_197.5 P71 BN71A4**	293
7.1	306	2.0	188.3	12000	**A353_188.3 S05 M05C4**	288	**A353_188.3 P71 BN71A4**	289
7.3	299	2.8	184.4	15000	**A413_184.4 S05 M05C4**	292	**A413_184.4 P71 BN71A4**	293
7.5	290	1.2	178.5	9600	**A303_178.5 S05 M05C4**	284	**A303_178.5 P71 BN71A4**	285
7.8	279	2.2	171.8	12000	**A353_171.8 S05 M05C4**	288	**A353_171.8 P71 BN71A4**	289
8.4	257	0.9	163.4	6200	**A203_163.4 S05 M05C4**	280	**A203_163.4 P71 BN71A4**	281
8.5	254	1.3	161.4	9600	**A303_161.4 S05 M05C4**	284	**A303_161.4 P71 BN71A4**	285
8.9	244	1.4	150.7	9600	**A303_150.7 S05 M05C4**	284	**A303_150.7 P71 BN71A4**	285
8.9	244	2.5	150.6	12000	**A353_150.6 S05 M05C4**	288	**A353_150.6 P71 BN71A4**	289
9.2	237	1.0	146.1	6200	**A203_146.1 S05 M05C4**	280	**A203_146.1 P71 BN71A4**	281
9.8	221	2.6	136.3	12000	**A353_136.3 S05 M05C4**	288	**A353_136.3 P71 BN71A4**	289
10.0	216	1.5	137.4	9600	**A303_137.4 S05 M05C4**	284	**A303_137.4 P71 BN71A4**	285
10.7	203	1.1	129.1	6200	**A203_129.1 S05 M05C4**	280	**A203_129.1 P71 BN71A4**	281
11.1	196	1.1	120.5	6200	**A203_120.5 S05 M05C4**	280	**A203_120.5 P71 BN71A4**	281
11.1	195	1.5	120.5	9600	**A303_120.5 S05 M05C4**	284	**A303_120.5 P71 BN71A4**	285
11.5	190	3.0	116.9	12000	**A353_116.9 S05 M05C4**	288	**A353_116.9 P71 BN71A4**	289
12.6	172	1.2	109.2	6200	**A203_109.2 S05 M05C4**	280	**A203_109.2 P71 BN71A4**	281
12.7	172	1.7	109.1	9600	**A303_109.1 S05 M05C4**	284	**A303_109.1 P71 BN71A4**	285
12.7	171	3.1	105.5	12000	**A353_105.5 S05 M05C4**	288	**A353_105.5 P71 BN71A4**	289
14.2	159	1.9	97.5	9600			**A302_97.5 P71 BN71A4**	285
14.4	156	3.5	95.6	12000			**A352_95.6 P71 BN71A4**	289
14.5	155	1.3	92.3	6200	**A202_92.3 S05 M05C4**	280	**A202_92.3 P71 BN71A4**	281
15.9	141	2.3	86.7	9600			**A302_86.7 P71 BN71A4**	285
16.8	134	1.6	79.9	6200	**A202_79.9 S05 M05C4**	280	**A202_79.9 P71 BN71A4**	281
17.5	128	1.2	76.4	5500	**A102_76.4 S05 M05C4**	276	**A102_76.4 P71 BN71A4**	277
18.0	125	2.8	76.5	9600			**A302_76.5 P71 BN71A4**	285
19.4	116	1.8	71.0	6200	**A202_71.0 S05 M05C4**	280	**A202_71.0 P71 BN71A4**	281
20.3	110	0.9	65.9	3610	**A052_65.9 S05 M05C4**	273	**A052_65.9 P71 BN71A4**	273

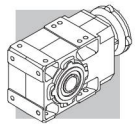

0.25 kW

n_2 min^{-1}	M_2 Nm	S	i	R_{n2} N			IEC	
20.3	110	1.4	65.9	5500	**A102_65.9 S05 M05C4**	276	**A102_65.9 P71 BN71A4**	277
21.2	106	2.3	63.1	6200	**A202_63.1 S05 M05C4**	280	**A202_63.1 P71 BN71A4**	281
22.9	98	1.0	58.6	3540	**A052_58.6 S05 M05C4**	273	**A052_58.6 P71 BN71A4**	273
23.5	95	1.6	58.6	5500	**A102_58.6 S05 M05C4**	276	**A102_58.6 P71 BN71A4**	277
25.0	90	2.8	53.7	6200	**A202_53.7 S05 M05C4**	280	**A202_53.7 P71 BN71A4**	281
26.1	86	1.2	51.3	3450	**A052_51.3 S05 M05C4**	273	**A052_51.3 P71 BN71A4**	273
26.1	86	1.7	51.3	5500	**A102_51.3 S05 M05C4**	276	**A102_51.3 P71 BN71A4**	277
28.6	79	3.2	48.3	6180	**A202_48.3 S05 M05C4**	280	**A202_48.3 P71 BN71A4**	281
29.5	76	1.3	45.4	3370	**A052_45.4 S05 M05C4**	273	**A052_45.4 P71 BN71A4**	273
29.5	76	2.0	45.4	5500	**A102_45.4 S05 M05C4**	276	**A102_45.4 P71 BN71A4**	277
33	68	1.5	40.9	3290	**A052_40.9 S05 M05C4**	273	**A052_40.9 P71 BN71A4**	273
34	66	2.3	40.9	5500	**A102_40.9 S05 M05C4**	276	**A102_40.9 P71 BN71A4**	277
38	59	1.7	35.1	3180	**A052_35.1 S05 M05C4**	273	**A052_35.1 P71 BN71A4**	273
38	59	2.5	35.1	5260	**A102_35.1 S05 M05C4**	276	**A102_35.1 P71 BN71A4**	277
42	54	1.9	32.2	3120	**A052_32.2 S05 M05C4**	273	**A052_32.2 P71 BN71A4**	273
43	52	2.9	32.2	5500	**A102_32.2 S05 M05C4**	276	**A102_32.2 P71 BN71A4**	277
47	48	2.1	28.6	3030	**A052_28.6 S05 M05C4**	273	**A052_28.6 P71 BN71A4**	273
47	48	3.1	28.6	4970	**A102_28.6 S05 M05C4**	276	**A102_28.6 P71 BN71A4**	277
53	43	2.3	25.5	2940	**A052_25.5 S05 M05C4**	273	**A052_25.5 P71 BN71A4**	273
56	40	2.5	23.8	2890	**A052_23.8 S05 M05C4**	273	**A052_23.8 P71 BN71A4**	273
63	36	2.8	21.4	2810	**A052_21.4 S05 M05C4**	273	**A052_21.4 P71 BN71A4**	273
72	31	3.2	18.6	2710	**A052_18.6 S05 M05C4**	273	**A052_18.6 P71 BN71A4**	273
84	27	3.7	16.4	2620	**A052_16.4 S05 M05C4**	273	**A052_16.4 P71 BN71A4**	273
99	23	4.4	13.9	2500	**A052_13.9 S05 M05C4**	273	**A052_13.9 P71 BN71A4**	273
112	20	5.0	12.3	2420	**A052_12.3 S05 M05C4**	273	**A052_12.3 P71 BN71A4**	273
131	17.2	5.8	10.6	2310	**A052_10.6 S05 M05C4**	273	**A052_10.6 P71 BN71A4**	273
144	15.7	6.4	9.6	2260	**A052_9.6 S05 M05C4**	273	**A052_9.6 P71 BN71A4**	273
162	13.9	7.2	8.5	2180	**A052_8.5 S05 M05C4**	273	**A052_8.5 P71 BN71A4**	273
191	11.7	8.5	7.2	2070	**A052_7.2 S05 M05C4**	273	**A052_7.2 P71 BN71A4**	273
218	10.3	9.7	6.3	1990	**A052_6.3 S05 M05C4**	273	**A052_6.3 P71 BN71A4**	273
252	8.9	10.7	5.5	1900	**A052_5.5 S05 M05C4**	273	**A052_5.5 P71 BN71A4**	273
285	7.9	12.1	9.6	1820	**A052_9.6 S05 M05B2**	273	**A052_9.6 P63 BN63B2**	273
322	7.0	12.9	8.5	1750	**A052_8.5 S05 M05B2**	273	**A052_8.5 P63 BN63B2**	273
380	5.9	14.4	7.2	1660	**A052_7.2 S05 M05B2**	273	**A052_7.2 P63 BN63B2**	273
433	5.2	15.4	6.3	1590	**A052_6.3 S05 M05B2**	273	**A052_6.3 P63 BN63B2**	273
501	4.5	16.7	5.5	1520	**A052_5.5 S05 M05B2**	273	**A052_5.5 P63 BN63B2**	273

0.37 kW

n_2 min^{-1}	M_2 Nm	S	i	R_{n2} N			IEC	
0.56	5644	2.5	1632	75000	**A904_1632 S1 M1LA6**	314	**A904_1632 P80 BN80A6**	315
0.63	4972	1.6	1438	65000	**A804_1438 S1 M1LA6**	311	**A804_1438 P80 BN80A6**	312
0.74	4226	3.3	1222	75000	**A904_1222 S1 M1LA6**	314	**A904_1222 P80 BN80A6**	315
0.80	3939	1.3	1715	50000	**A704_1715 S1 M1SD4**	308	**A704_1715 P71 BN71B4**	309
0.87	3636	1.4	1583	50000	**A704_1583 S1 M1SD4**	308	**A704_1583 P71 BN71B4**	309
0.88	3577	2.2	1558	65000	**A804_1558 S1 M1SD4**	311	**A804_1558 P71 BN71B4**	312
0.95	3302	2.4	1438	65000	**A804_1438 S1 M1SD4**	311	**A804_1438 P71 BN71B4**	312
1.0	3091	1.6	1346	50000	**A704_1346 S1 M1SD4**	308	**A704_1346 P71 BN71B4**	309

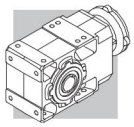

0.37 kW

n_2 min^{-1}	M_2 Nm	S	i	R_{n2} N			IEC	
1.0	3077	2.6	1340	65000	**A804_1340 S1 M1SD4**	311	**A804_1340 P71 BN71B4**	312
1.1	2853	1.8	1242	50000	**A704_1242 S1 M1SD4**	308	**A704_1242 P71 BN71B4**	309
1.1	2841	2.8	1237	65000	**A804_1237 S1 M1SD4**	311	**A804_1237 P71 BN71B4**	312
1.2	2668	1.9	1161	50000	**A704_1161 S1 M1SD4**	308	**A704_1161 P71 BN71B4**	309
1.3	2492	3.2	1085	65000	**A804_1085 S1 M1SD4**	311	**A804_1085 P71 BN71B4**	312
1.3	2462	2.0	1072	50000	**A704_1072 S1 M1SD4**	308	**A704_1072 P71 BN71B4**	309
1.4	2300	3.5	1001	65000	**A804_1001 S1 M1SD4**	311	**A804_1001 P71 BN71B4**	312
1.5	2128	2.3	926.5	50000	**A704_926.5 S1 M1SD4**	308	**A704_926.5 P71 BN71B4**	309
1.6	1964	2.5	855.3	50000	**A704_855.3 S1 M1SD4**	308	**A704_855.3 P71 BN71B4**	309
1.8	1754	2.8	763.9	50000	**A704_763.9 S1 M1SD4**	308	**A704_763.9 P71 BN71B4**	309
1.8	1735	1.6	755.4	30000	**A604_755.4 S1 M1SD4**	304	**A604_755.4 P71 BN71B4**	305
1.9	1626	0.9	707.9	20000	**A504_707.9 S1 M1SD4**	296	**A504_707.9 P71 BN71B4**	297
1.9	1619	3.1	705.1	50000	**A704_705.1 S1 M1SD4**	308	**A704_705.1 P71 BN71B4**	309
2.0	1601	1.7	697.3	30000	**A604_697.3 S1 M1SD4**	304	**A604_697.3 P71 BN71B4**	305
2.1	1481	3.4	644.6	50000	**A704_644.6 S1 M1SD4**	308	**A704_644.6 P71 BN71B4**	309
2.2	1457	1.9	634.6	30000	**A604_634.6 S1 M1SD4**	304	**A604_634.6 P71 BN71B4**	305
2.2	1450	1.0	631.2	20000	**A504_631.2 S1 M1SD4**	296	**A504_631.2 P71 BN71B4**	297
2.3	1345	2.1	585.8	30000	**A604_585.8 S1 M1SD4**	304	**A604_585.8 P71 BN71B4**	305
2.4	1319	1.1	574.2	20000	**A504_574.2 S1 M1SD4**	296	**A504_574.2 P71 BN71B4**	297
2.5	1245	2.2	542.0	30000	**A604_542.0 S1 M1SD4**	304	**A604_542.0 P71 BN71B4**	305
2.6	1216	1.2	529.5	20000	**A504_529.5 S1 M1SD4**	296	**A504_529.5 P71 BN71B4**	297
2.7	1149	2.4	500.3	30000	**A604_500.3 S1 M1SD4**	304	**A604_500.3 P71 BN71B4**	305
2.8	1106	1.4	481.6	20000	**A504_481.6 S1 M1SD4**	296	**A504_481.6 P71 BN71B4**	297
3.1	1026	1.5	446.8	20000	**A504_446.8 S1 M1SD4**	296	**A504_446.8 P71 BN71B4**	297
3.1	1007	2.8	438.4	30000	**A604_438.4 S1 M1SD4**	304	**A604_438.4 P71 BN71B4**	305
3.4	933	1.6	406.4	20000	**A504_406.4 S1 M1SD4**	296	**A504_406.4 P71 BN71B4**	297
3.4	929	3.0	404.7	30000	**A604_404.7 S1 M1SD4**	304	**A604_404.7 P71 BN71B4**	305
3.6	885	1.0	376.8	15000	**A413_376.8 S1 M1SD4**	292	**A413_376.8 P71 BN71B4**	293
3.7	840	1.8	365.6	20000	**A504_365.6 S1 M1SD4**	296	**A504_365.6 P71 BN71B4**	297
3.9	807	3.5	351.2	30000	**A604_351.2 S1 M1SD4**	304	**A604_351.2 P71 BN71B4**	305
4.1	764	2.0	332.6	20000	**A504_332.6 S1 M1SD4**	296	**A504_332.6 P71 BN71B4**	297
4.2	761	1.1	324.2	15000	**A413_324.2 S1 M1SD4**	292	**A413_324.2 P71 BN71B4**	293
4.7	685	1.2	291.7	15000	**A413_291.7 S1 M1SD4**	292	**A413_291.7 P71 BN71B4**	293
4.8	659	2.3	286.8	20000	**A504_286.8 S1 M1SD4**	296	**A504_286.8 P71 BN71B4**	297
5.1	636	0.9	270.7	12000	**A353_270.7 S1 M1SD4**	288	**A353_270.7 P71 BN71B4**	289
5.2	616	1.4	262.5	15000	**A413_262.5 S1 M1SD4**	292	**A413_262.5 P71 BN71B4**	293
5.3	599	2.5	260.9	20000	**A504_260.9 S1 M1SD4**	296	**A504_260.9 P71 BN71B4**	297
5.5	583	1.0	248.1	12000	**A353_248.1 S1 M1SD4**	288	**A353_248.1 P71 BN71B4**	289
5.7	565	1.5	240.6	15000	**A413_240.6 S1 M1SD4**	292	**A413_240.6 P71 BN71B4**	293
5.9	533	2.8	232.0	20000	**A504_232.0 S1 M1SD4**	296	**A504_232.0 P71 BN71B4**	297
6.1	524	1.1	223.2	12000	**A353_223.2 S1 M1SD4**	288	**A353_223.2 P71 BN71B4**	289
6.3	511	1.7	217.4	15000	**A413_217.4 S1 M1SD4**	292	**A413_217.4 P71 BN71B4**	293
6.5	485	3.1	211.0	20000	**A504_211.0 S1 M1SD4**	296	**A504_211.0 P71 BN71B4**	297
6.8	474	1.3	201.8	12000	**A353_201.8 S1 M1SD4**	288	**A353_201.8 P71 BN71B4**	289
6.9	464	1.8	197.5	15000	**A413_197.5 S1 M1SD4**	292	**A413_197.5 P71 BN71B4**	293
7.2	448	3.4	190.6	20000	**A503_190.6 S1 M1SD4**	296	**A503_190.6 P71 BN71B4**	297
7.3	442	1.4	188.3	12000	**A353_188.3 S1 M1SD4**	288	**A353_188.3 P71 BN71B4**	289
7.4	433	2.0	184.4	15000	**A413_184.4 S1 M1SD4**	292	**A413_184.4 P71 BN71B4**	293
8.0	403	1.5	171.8	12000	**A353_171.8 S1 M1SD4**	288	**A353_171.8 P71 BN71B4**	289
9.1	354	0.9	150.7	9600	**A303_150.7 S1 M1SD4**	284	**A303_150.7 P71 BN71B4**	285
9.1	354	1.7	150.6	12000	**A353_150.6 S1 M1SD4**	288	**A353_150.6 P71 BN71B4**	289

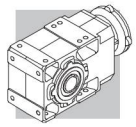

0.37 kW

n_2 min^{-1}	M_2 Nm	S	i	R_{n2} N	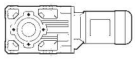			
9.3	345	2.5	146.9	15000	**A413_146.9 S1 M1SD4**	292	**A413_146.9 P71 BN71B4**	293
10.0	323	1.0	137.4	9600	**A303_137.4 S1 M1SD4**	284	**A303_137.4 P71 BN71B4**	285
10.0	320	1.8	136.3	12000	**A353_136.3 S1 M1SD4**	288	**A353_136.3 P71 BN71B4**	289
11.4	283	1.1	120.5	9600	**A303_120.5 S1 M1SD4**	284	**A303_120.5 P71 BN71B4**	285
11.7	275	2.0	116.9	12000	**A353_116.9 S1 M1SD4**	288	**A353_116.9 P71 BN71B4**	289
11.8	272	3.1	115.9	15000	**A413_115.9 S1 M1SD4**	292	**A413_115.9 P71 BN71B4**	293
12.6	256	1.2	109.1	9600	**A303_109.1 S1 M1SD4**	284	**A303_109.1 P71 BN71B4**	285
13.0	248	2.1	105.5	12000	**A353_105.5 S1 M1SD4**	288	**A353_105.5 P71 BN71B4**	289
14.1	237	1.3	97.5	9600			**A302_97.5 P71 BN71B4**	285
14.3	232	2.3	95.6	12000	**A352_95.6 S1 M1SD4**	288	**A352_95.6 P71 BN71B4**	289
15.8	210	1.5	86.7	9600			**A302_86.7 P71 BN71B4**	285
16.6	200	3.0	82.5	12000	**A352_82.5 S1 M1SD4**	288	**A352_82.5 P71 BN71B4**	289
17.2	194	1.1	79.9	6200			**A202_79.9 P71 BN71B4**	281
17.9	186	1.9	76.5	9600	**A302_76.5 S1 M1SD4**	284	**A302_76.5 P71 BN71B4**	285
18.4	180	3.3	74.3	12000	**A352_74.3 S1 M1SD4**	288	**A352_74.3 P71 BN71B4**	289
19.3	172	1.2	71.0	6200			**A202_71.0 P71 BN71B4**	281
20.7	160	2.4	66.0	9350	**A302_66.0 S1 M1SD4**	284	**A302_66.0 P71 BN71B4**	285
20.8	160	0.9	65.9	5500			**A102_65.9 P71 BN71B4**	277
21.7	153	1.6	63.1	6200	**A202_63.1 S1 M1SD4**	280	**A202_63.1 P71 BN71B4**	281
23.1	144	2.8	59.4	9080	**A302_59.4 S1 M1SD4**	284	**A302_59.4 P71 BN71B4**	285
23.4	142	1.1	58.6	5500			**A102_58.6 P71 BN71B4**	277
25.5	130	1.9	53.7	6090	**A202_53.7 S1 M1SD4**	280	**A202_53.7 P71 BN71B4**	281
26.0	128	3.2	52.7	8790	**A302_52.7 S1 M1SD4**	284	**A302_52.7 P71 BN71B4**	285
26.7	124	1.2	51.3	5490	**A102_51.3 S1 M1SD4**	276	**A102_51.3 P71 BN71B4**	277
28.4	117	2.1	48.3	5940	**A202_48.3 S1 M1SD4**	280	**A202_48.3 P71 BN71B4**	281
28.4	117	3.5	48.3	8580	**A302_48.3 S1 M1SD4**	284	**A302_48.3 P71 BN71B4**	285
30	110	0.9	45.4	3060	**A052_45.4 S1 M1SD4**	273	**A052_45.4 P71 BN71B4**	273
30	110	1.4	45.4	5350	**A102_45.4 S1 M1SD4**	276	**A102_45.4 P71 BN71B4**	277
32	105	2.4	43.2	5780	**A202_43.2 S1 M1SD4**	280	**A202_43.2 P71 BN71B4**	281
34	99	1.0	40.9	3020	**A052_40.9 S1 M1SD4**	273	**A052_40.9 P71 BN71B4**	273
34	99	1.5	40.9	5500	**A102_40.9 S1 M1SD4**	276	**A102_40.9 P71 BN71B4**	277
35	96	2.6	39.6	5650	**A202_39.6 S1 M1SD4**	280	**A202_39.6 P71 BN71B4**	281
39	86	2.9	35.4	5480	**A202_35.4 S1 M1SD4**	280	**A202_35.4 P71 BN71B4**	281
39	85	1.2	35.1	2950	**A052_35.1 S1 M1SD4**	273	**A052_35.1 P71 BN71B4**	273
39	85	1.8	35.1	5040	**A102_35.1 S1 M1SD4**	276	**A102_35.1 P71 BN71B4**	277
43	78	1.3	32.2	2900	**A052_32.2 S1 M1SD4**	273	**A052_32.2 P71 BN71B4**	273
43	78	1.9	32.2	5500	**A102_32.2 S1 M1SD4**	276	**A102_32.2 P71 BN71B4**	277
44	76	3.3	31.3	5310	**A202_31.3 S1 M1SD4**	280	**A202_31.3 P71 BN71B4**	281
47	71	3.5	29.2	5210	**A202_29.2 S1 M1SD4**	280	**A202_29.2 P71 BN71B4**	281
48	69	1.4	28.6	2840	**A052_28.6 S1 M1SD4**	273	**A052_28.6 P71 BN71B4**	273
48	69	2.2	28.6	4790	**A102_28.6 S1 M1SD4**	276	**A102_28.6 P71 BN71B4**	277
54	62	1.6	25.5	2770	**A052_25.5 S1 M1SD4**	273	**A052_25.5 P71 BN71B4**	273
54	62	2.4	25.5	5500	**A102_25.5 S1 M1SD4**	276	**A102_25.5 P71 BN71B4**	277
58	58	1.7	23.8	2730	**A052_23.8 S1 M1SD4**	273	**A052_23.8 P71 BN71B4**	273
58	58	2.6	23.8	4570	**A102_23.8 S1 M1SD4**	276	**A102_23.8 P71 BN71B4**	277
64	52	1.9	21.4	2670	**A052_21.4 S1 M1SD4**	273	**A052_21.4 P71 BN71B4**	273
64	52	2.9	21.4	5270	**A102_21.4 S1 M1SD4**	276	**A102_21.4 P71 BN71B4**	277
74	45	2.2	18.6	2590	**A052_18.6 S1 M1SD4**	273	**A052_18.6 P71 BN71B4**	273
74	45	3.3	18.6	4270	**A102_18.6 S1 M1SD4**	276	**A102_18.6 P71 BN71B4**	277
83	40	2.5	16.4	2510	**A052_16.4 S1 M1SD4**	273	**A052_16.4 P71 BN71B4**	273
98	34	3.0	13.9	2410	**A052_13.9 S1 M1SD4**	273	**A052_13.9 P71 BN71B4**	273

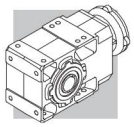

0.37 kW

n_2 min^{-1}	M_2 Nm	S	i	R_{n2} N			IEC	
111	30	3.3	12.3	2350	**A052_12.3 S1 M1SD4**	273	**A052_12.3 P71 BN71B4**	273
130	26	3.9	10.6	2240	**A052_10.6 S1 M1SD4**	273	**A052_10.6 P71 BN71B4**	273
142	23	4.3	9.6	2190	**A052_9.6 S1 M1SD4**	273	**A052_9.6 P71 BN71B4**	273
161	21	4.8	8.5	2120	**A052_8.5 S1 M1SD4**	273	**A052_8.5 P71 BN71B4**	273
190	17.5	5.7	7.2	2030	**A052_7.2 S1 M1SD4**	273	**A052_7.2 P71 BN71B4**	273
216	15.4	6.5	6.3	1950	**A052_6.3 S1 M1SD4**	273	**A052_6.3 P71 BN71B4**	273
228	14.6	6.8	12.3	1920	**A052_12.3 S05 M05C2**	273	**A052_12.3 P71 BN71A2**	273
251	13.3	7.2	5.5	1870	**A052_5.5 S1 M1SD4**	273	**A052_5.5 P71 BN71B4**	273
265	12.5	6.4	10.6	1830	**A052_10.6 S05 M05C2**	273	**A052_10.6 P71 BN71A2**	273
291	11.4	8.3	9.6	1790	**A052_9.6 S05 M05C2**	273	**A052_9.6 P71 BN71A2**	273
331	10.0	9.0	8.5	1720	**A052_8.5 S05 M05C2**	273	**A052_8.5 P71 BN71A2**	273
388	8.6	9.9	7.2	1640	**A052_7.2 S05 M05C2**	273	**A052_7.2 P71 BN71A2**	273
445	7.5	10.7	6.3	1570	**A052_6.3 S05 M05C2**	273	**A052_6.3 P71 BN71A2**	273
512	6.5	11.6	5.5	1500	**A052_5.5 S05 M05C2**	273		

0.55 kW

n_2 min^{-1}	M_2 Nm	S	i	R_{n2} N			IEC	
0.56	8299	1.7	1632	75000	**A904_1632 S2 M2SA6**	314	**A904_1632 P80 BN80B6**	315
0.64	7310	1.1	1438	65000	**A804_1438 S2 M2SA6**	311	**A804_1438 P80 BN80B6**	312
0.75	6213	2.3	1222	75000	**A904_1222 S2 M2SA6**	314	**A904_1222 P80 BN80B6**	315
0.80	5813	0.9	1715	50000	**A704_1715 S1 M1LA4**	308	**A704_1715 P80 BN80A4**	309
0.85	5532	2.5	1632	75000	**A904_1632 S1 M1LA4**	314	**A904_1632 P80 BN80A4**	315
0.87	5365	0.9	1583	50000	**A704_1583 S1 M1LA4**	308	**A704_1583 P80 BN80A4**	309
0.89	5279	1.5	1558	65000	**A804_1558 S1 M1LA4**	311	**A804_1558 P80 BN80A4**	312
0.92	5070	2.8	1507	75000	**A904_1507 S1 M1LA4**	314	**A904_1507 P80 BN80A4**	315
0.96	4873	1.6	1438	65000	**A804_1438 S1 M1LA4**	311	**A804_1438 P80 BN80A4**	312
1.0	4561	1.1	1346	50000	**A704_1346 S1 M1LA4**	308	**A704_1346 P80 BN80A4**	309
1.0	4541	1.8	1340	65000	**A804_1340 S1 M1LA4**	311	**A804_1340 P80 BN80A4**	312
1.0	4455	3.1	1324	75000	**A904_1324 S1 M1LA4**	314	**A904_1324 P80 BN80A4**	315
1.1	4211	1.2	1242	50000	**A704_1242 S1 M1LA4**	308	**A704_1242 P80 BN80A4**	309
1.1	4192	1.9	1237	65000	**A804_1237 S1 M1LA4**	311	**A804_1237 P80 BN80A4**	312
1.1	4112	3.4	1222	75000	**A904_1222 S1 M1LA4**	314	**A904_1222 P80 BN80A4**	315
1.2	3937	1.3	1161	50000	**A704_1161 S1 M1LA4**	308	**A704_1161 P80 BN80A4**	309
1.3	3677	2.2	1085	65000	**A804_1085 S1 M1LA4**	311	**A804_1085 P80 BN80A4**	312
1.3	3634	1.4	1072	50000	**A704_1072 S1 M1LA4**	308	**A704_1072 P80 BN80A4**	309
1.4	3394	2.4	1001	65000	**A804_1001 S1 M1LA4**	311	**A804_1001 P80 BN80A4**	312
1.5	3140	1.6	926.5	50000	**A704_926.5 S1 M1LA4**	308	**A704_926.5 P80 BN80A4**	309
1.5	3046	2.6	898.7	65000	**A804_898.7 S1 M1LA4**	311	**A804_898.7 P80 BN80A4**	312
1.6	2899	1.7	855.3	50000	**A704_855.3 S1 M1LA4**	308	**A704_855.3 P80 BN80A4**	309
1.7	2811	2.8	829.5	65000	**A804_829.5 S1 M1LA4**	311	**A804_829.5 P80 BN80A4**	312
1.8	2589	1.9	763.9	50000	**A704_763.9 S1 M1LA4**	308	**A704_763.9 P80 BN80A4**	309
1.8	2583	3.1	762.1	65000	**A804_762.1 S1 M1LA4**	311	**A804_762.1 P80 BN80A4**	312
1.8	2560	1.1	755.4	30000	**A604_755.4 S1 M1LA4**	304	**A604_755.4 P80 BN80A4**	305
2.0	2390	2.1	705.1	50000	**A704_705.1 S1 M1LA4**	308	**A704_705.1 P80 BN80A4**	309
2.0	2384	3.4	703.5	65000	**A804_703.5 S1 M1LA4**	311	**A804_703.5 P80 BN80A4**	312
2.0	2363	1.2	697.3	30000	**A604_697.3 S1 M1LA4**	304	**A604_697.3 P80 BN80A4**	305
2.1	2185	2.3	644.6	50000	**A704_644.6 S1 M1LA4**	308	**A704_644.6 P80 BN80A4**	309

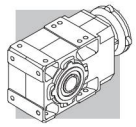

0.55 kW

n_2 min^{-1}	M_2 Nm	S	i	R_{n2} N	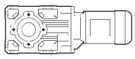		 IEC	
2.2	2151	1.3	634.6	30000	**A604_634.6 S1 M1LA4**	304	**A604_634.6 P80 BN80A4**	305
2.3	2017	2.5	595.0	50000	**A704_595.0 S1 M1LA4**	308	**A704_595.0 P80 BN80A4**	309
2.4	1985	1.4	585.8	30000	**A604_585.8 S1 M1LA4**	304	**A604_585.8 P80 BN80A4**	305
2.5	1837	1.5	542.0	30000	**A604_542.0 S1 M1LA4**	304	**A604_542.0 P80 BN80A4**	305
2.7	1747	2.9	515.4	50000	**A704_515.4 S1 M1LA4**	308	**A704_515.4 P80 BN80A4**	309
2.8	1696	1.7	500.3	30000	**A604_500.3 S1 M1LA4**	304	**A604_500.3 P80 BN80A4**	305
2.9	1632	0.9	481.6	20000	**A504_481.6 S1 M1LA4**	296	**A504_481.6 P80 BN80A4**	297
2.9	1612	3.1	475.8	50000	**A704_475.8 S1 M1LA4**	308	**A704_475.8 P80 BN80A4**	309
3.1	1514	1.0	446.8	20000	**A504_446.8 S1 M1LA4**	296	**A504_446.8 P80 BN80A4**	297
3.1	1486	1.9	438.4	30000	**A604_438.4 S1 M1LA4**	304	**A604_438.4 P80 BN80A4**	305
3.4	1378	1.1	406.4	20000	**A504_406.4 S1 M1LA4**	296	**A504_406.4 P80 BN80A4**	297
3.4	1372	2.0	404.7	30000	**A604_404.7 S1 M1LA4**	304	**A604_404.7 P80 BN80A4**	305
3.8	1239	1.2	365.6	20000	**A504_365.6 S1 M1LA4**	296	**A504_365.6 P80 BN80A4**	297
3.9	1190	2.4	351.2	30000	**A604_351.2 S1 M1LA4**	304	**A604_351.2 P80 BN80A4**	305
4.1	1127	1.3	332.6	20000	**A504_332.6 S1 M1LA4**	296	**A504_332.6 P80 BN80A4**	297
4.3	1099	2.5	324.2	30000	**A604_324.2 S1 M1LA4**	304	**A604_324.2 P80 BN80A4**	305
4.8	972	1.5	286.8	20000	**A504_286.8 S1 M1LA4**	296	**A504_286.8 P80 BN80A4**	297
4.8	970	2.9	286.3	30000	**A604_286.3 S1 M1LA4**	304	**A604_286.3 P80 BN80A4**	305
5.2	896	3.1	264.3	30000	**A604_264.3 S1 M1LA4**	304	**A604_264.3 P80 BN80A4**	305
5.3	910	0.9	262.5	15000	**A413_262.5 S1 M1LA4**	292	**A413_262.5 P80 BN80A4**	293
5.3	884	1.7	260.9	20000	**A504_260.9 S1 M1LA4**	296	**A504_260.9 P80 BN80A4**	297
5.7	834	1.0	240.6	15000	**A413_240.6 S1 M1LA4**	292	**A413_240.6 P80 BN80A4**	293
5.9	786	1.9	232.0	20000	**A504_232.0 S1 M1LA4**	296	**A504_232.0 P80 BN80A4**	297
6.3	753	1.1	217.4	15000	**A413_217.4 S1 M1LA4**	292	**A413_217.4 P80 BN80A4**	293
6.5	715	2.1	211.0	20000	**A504_211.0 S1 M1LA4**	296	**A504_211.0 P80 BN80A4**	297
7.0	685	1.2	197.5	15000	**A413_197.5 S1 M1LA4**	292	**A413_197.5 P80 BN80A4**	293
7.1	673	3.0	194.2	30000	**A553_194.2 S1 M1LA4**	300	**A553_194.2 P80 BN80A4**	301
7.2	660	2.3	190.6	20000	**A503_190.6 S1 M1LA4**	296	**A503_190.6 P80 BN80A4**	297
7.3	653	0.9	188.3	12000	**A353_188.3 S1 M1LA4**	288	**A353_188.3 P80 BN80A4**	289
7.5	639	1.3	184.4	15000	**A413_184.4 S1 M1LA4**	292	**A413_184.4 P80 BN80A4**	293
7.9	607	3.3	175.0	30000	**A553_175.0 S1 M1LA4**	300	**A553_175.0 P80 BN80A4**	301
8.0	601	2.5	173.4	20000	**A503_173.4 S1 M1LA4**	296	**A503_173.4 P80 BN80A4**	297
8.0	595	1.0	171.8	12000	**A353_171.8 S1 M1LA4**	288	**A353_171.8 P80 BN80A4**	289
9.0	532	2.8	154.6	20000	**A503_154.6 S1 M1LA4**	296	**A503_154.6 P80 BN80A4**	297
9.2	522	1.1	150.6	12000	**A353_150.6 S1 M1LA4**	288	**A353_150.6 P80 BN80A4**	289
9.4	509	1.7	146.9	15000	**A413_146.9 S1 M1LA4**	292	**A413_146.9 P80 BN80A4**	293
9.9	484	3.1	140.6	20000	**A503_140.6 S1 M1LA4**	296	**A503_140.6 P80 BN80A4**	297
10.1	472	1.2	136.3	12000	**A353_136.3 S1 M1LA4**	288	**A353_136.3 P80 BN80A4**	289
10.7	446	3.4	129.7	20000	**A503_129.7 S1 M1LA4**	296	**A503_129.7 P80 BN80A4**	297
11.8	405	1.4	116.9	12000	**A353_116.9 S1 M1LA4**	288	**A353_116.9 P80 BN80A4**	289
11.9	402	2.1	115.9	15000	**A413_115.9 S1 M1LA4**	292	**A413_115.9 P80 BN80A4**	293
13.1	366	1.4	105.5	12000	**A353_105.5 S1 M1LA4**	288	**A353_105.5 P80 BN80A4**	289
14.2	349	0.9	97.5	9600			**A302_97.5 P80 BN80A4**	285
14.4	342	1.6	95.6	12000	**A352_95.6 S1 M1LA4**	288	**A352_95.6 P80 BN80A4**	289
14.9	321	2.5	92.8	15000	**A413_92.8 S1 M1LA4**	292	**A413_92.8 P80 BN80A4**	293
15.9	310	1.0	86.7	9420			**A302_86.7 P80 BN80A4**	285
16.7	295	2.0	82.5	12000	**A352_82.5 S1 M1LA4**	288	**A352_82.5 P80 BN80A4**	289
17.4	284	3.0	79.2	15000	**A412_79.2 S1 M1LA4**	292	**A412_79.2 P80 BN80A4**	293
18.0	274	1.3	76.5	9180	**A302_76.5 S1 M1LA4**	284	**A302_76.5 P80 BN80A4**	285
18.6	266	2.3	74.3	12000	**A352_74.3 S1 M1LA4**	288	**A352_74.3 P80 BN80A4**	289
19.4	255	3.3	71.3	15000	**A412_71.3 S1 M1LA4**	292	**A412_71.3 P80 BN80A4**	293

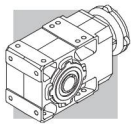

0.55 kW

n_2 min^{-1}	M_2 Nm	S	i	R_{n2} N	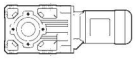		 IEC	
20.9	236	1.6	66.0	8880	**A302_66.0 S1 M1LA4**	284	**A302_66.0 P80 BN80A4**	285
21.0	236	2.5	65.8	12000	**A352_65.8 S1 M1LA4**	288	**A352_65.8 P80 BN80A4**	289
21.9	226	1.1	63.1	5840	**A202_63.1 S1 M1LA4**	280	**A202_63.1 P80 BN80A4**	281
22.9	216	2.8	60.4	12000	**A352_60.4 S1 M1LA4**	288	**A352_60.4 P80 BN80A4**	289
23.2	213	1.9	59.4	8660	**A302_59.4 S1 M1LA4**	284	**A302_59.4 P80 BN80A4**	285
25.4	194	3.1	54.3	12000	**A352_54.3 S1 M1LA4**	288	**A352_54.3 P80 BN80A4**	289
25.7	192	1.3	53.7	5670	**A202_53.7 S1 M1LA4**	280	**A202_53.7 P80 BN80A4**	281
26.2	189	2.2	52.7	8410	**A302_52.7 S1 M1LA4**	284	**A302_52.7 P80 BN80A4**	285
28.1	176	3.4	49.1	12000	**A352_49.1 S1 M1LA4**	288	**A352_49.1 P80 BN80A4**	289
28.6	173	1.4	48.3	5560	**A202_48.3 S1 M1LA4**	280	**A202_48.3 P80 BN80A4**	281
28.6	173	2.4	48.3	8230	**A302_48.3 S1 M1LA4**	284	**A302_48.3 P80 BN80A4**	285
30	163	0.9	45.4	4910	**A102_45.4 S1 M1LA4**	276	**A102_45.4 P80 BN80A4**	277
32	155	2.6	43.4	8010	**A302_43.4 S1 M1LA4**	284	**A302_43.4 P80 BN80A4**	285
32	155	1.6	43.2	5440	**A202_43.2 S1 M1LA4**	280	**A202_43.2 P80 BN80A4**	281
34	146	1.0	40.9	5500	**A102_40.9 S1 M1LA4**	276	**A102_40.9 P80 BN80A4**	277
35	142	1.8	39.6	5340	**A202_39.6 S1 M1LA4**	280	**A202_39.6 P80 BN80A4**	281
35	141	2.9	39.3	7800	**A302_39.3 S1 M1LA4**	284	**A302_39.3 P80 BN80A4**	285
38	131	3.1	36.6	7660	**A302_36.6 S1 M1LA4**	284	**A302_36.6 P80 BN80A4**	285
39	127	2.0	35.4	5200	**A202_35.4 S1 M1LA4**	280	**A202_35.4 P80 BN80A4**	281
39	126	1.2	35.1	4700	**A102_35.1 S1 M1LA4**	276	**A102_35.1 P80 BN80A4**	277
41	120	3.4	33.4	7480	**A302_33.4 S1 M1LA4**	284	**A302_33.4 P80 BN80A4**	285
43	115	1.3	32.2	5490	**A102_32.2 S1 M1LA4**	276	**A102_32.2 P80 BN80A4**	277
44	112	2.2	31.3	5060	**A202_31.3 S1 M1LA4**	280	**A202_31.3 P80 BN80A4**	281
47	105	2.4	29.2	4970	**A202_29.2 S1 M1LA4**	280	**A202_29.2 P80 BN80A4**	281
48	102	1.0	28.6	2550	**A052_28.6 S1 M1LA4**	273	**A052_28.6 P80 BN80A4**	273
48	102	1.5	28.6	4510	**A102_28.6 S1 M1LA4**	276	**A102_28.6 P80 BN80A4**	277
52	95	2.6	26.5	4850	**A202_26.5 S1 M1LA4**	280	**A202_26.5 P80 BN80A4**	281
54	91	1.1	25.5	2510	**A052_25.5 S1 M1LA4**	273	**A052_25.5 P80 BN80A4**	273
54	91	1.6	25.5	5230	**A102_25.5 S1 M1LA4**	276	**A102_25.5 P80 BN80A4**	277
58	85	1.2	23.8	2490	**A052_23.8 S1 M1LA4**	273	**A052_23.8 P80 BN80A4**	273
58	85	1.8	23.8	4330	**A102_23.8 S1 M1LA4**	276	**A102_23.8 P80 BN80A4**	277
60	83	3.0	23.1	4690	**A202_23.1 S1 M1LA4**	280	**A202_23.1 P80 BN80A4**	281
65	76	1.3	21.4	2450	**A052_21.4 S1 M1LA4**	273	**A052_21.4 P80 BN80A4**	273
65	76	2.0	21.4	5020	**A102_21.4 S1 M1LA4**	276	**A102_21.4 P80 BN80A4**	277
65	76	3.3	21.2	4590	**A202_21.2 S1 M1LA4**	280	**A202_21.2 P80 BN80A4**	281
74	66	1.5	18.6	2400	**A052_18.6 S1 M1LA4**	273	**A052_18.6 P80 BN80A4**	273
74	66	2.3	18.6	4090	**A102_18.6 S1 M1LA4**	276	**A102_18.6 P80 BN80A4**	277
84	59	1.7	16.4	2340	**A052_16.4 S1 M1LA4**	273	**A052_16.4 P80 BN80A4**	273
84	59	2.5	16.4	4710	**A102_16.4 S1 M1LA4**	276	**A102_16.4 P80 BN80A4**	277
99	50	2.0	13.9	2270	**A052_13.9 S1 M1LA4**	273	**A052_13.9 P80 BN80A4**	273
99	50	3.0	13.9	3800	**A102_13.9 S1 M1LA4**	276	**A102_13.9 P80 BN80A4**	277
112	44	2.3	12.3	2220	**A052_12.3 S1 M1LA4**	273	**A052_12.3 P80 BN80A4**	273
112	44	3.2	12.3	3670	**A102_12.3 S1 M1LA4**	276	**A102_12.3 P80 BN80A4**	277
131	38	2.6	10.6	2130	**A052_10.6 S1 M1LA4**	273	**A052_10.6 P80 BN80A4**	273
144	34	2.9	9.6	2100	**A052_9.6 S1 M1LA4**	273	**A052_9.6 P80 BN80A4**	273
162	30	3.3	8.5	2030	**A052_8.5 S1 M1LA4**	273	**A052_8.5 P80 BN80A4**	273
171	29	3.1	16.4	2000	**A052_16.4 S1 M1SD2**	273	**A052_16.4 P71 BN71B2**	273
191	26	3.9	7.2	1950	**A052_7.2 S1 M1LA4**	273	**A052_7.2 P80 BN80A4**	273
218	23	4.4	6.3	1880	**A052_6.3 S1 M1LA4**	273	**A052_6.3 P80 BN80A4**	273
229	22	4.6	12.3	1860	**A052_12.3 S1 M1SD2**	273	**A052_12.3 P71 BN71B2**	273
252	19.6	4.9	5.5	1810	**A052_5.5 S1 M1LA4**	273	**A052_5.5 P80 BN80A4**	273

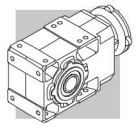

0.55 kW

n_2 min^{-1}	M_2 Nm	S	i	R_{n2} N	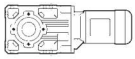		 IEC	
267	18.5	4.3	10.6	1780	**A052_10.6 S1 M1SD2**	273	**A052_10.6 P71 BN71B2**	273
293	16.8	5.6	9.6	1740	**A052_9.6 S1 M1SD2**	273	**A052_9.6 P71 BN71B2**	273
331	14.9	6.0	8.5	1680	**A052_8.5 S1 M1SD2**	273	**A052_8.5 P71 BN71B2**	273
391	12.6	6.7	7.2	1600	**A052_7.2 S1 M1SD2**	273	**A052_7.2 P71 BN71B2**	273
445	11.1	7.2	6.3	1540	**A052_6.3 S1 M1SD2**	273	**A052_6.3 P71 BN71B2**	273
516	9.6	7.8	5.5	1480	**A052_5.5 S1 M1SD2**	273	**A052_5.5 P71 BN71B2**	273

0.75 kW

n_2 min^{-1}	M_2 Nm	S	i	R_{n2} N	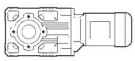		 IEC	
0.56	11316	1.2	1632	75000	**A904_1632 S2 M2SB6**	314	**A904_1632 P90 BN90S6**	315
0.61	10446	1.3	1507	75000	**A904_1507 S2 M2SB6**	314	**A904_1507 P90 BN90S6**	315
0.69	9179	1.5	1324	75000	**A904_1324 S2 M2SB6**	314	**A904_1324 P90 BN90S6**	315
0.75	8473	1.7	1222	75000	**A904_1222 S2 M2SB6**	314	**A904_1222 P90 BN90S6**	315
0.86	7436	1.9	1632	75000	**A904_1632 S2 M2SA4**	314	**A904_1632 P80 BN80B4**	315
0.90	7096	1.1	1558	65000	**A804_1558 S2 M2SA4**	311	**A804_1558 P80 BN80B4**	312
0.93	6864	2.0	1507	75000	**A904_1507 S2 M2SA4**	314	**A904_1507 P80 BN80B4**	315
0.97	6550	1.2	1438	65000	**A804_1438 S2 M2SA4**	311	**A804_1438 P80 BN80B4**	312
1.0	6104	1.3	1340	65000	**A804_1340 S2 M2SA4**	311	**A804_1340 P80 BN80B4**	312
1.1	6032	2.3	1324	75000	**A904_1324 S2 M2SA4**	314	**A904_1324 P80 BN80B4**	315
1.1	5660	0.9	1242	50000	**A704_1242 S2 M2SA4**	308	**A704_1242 P80 BN80B4**	309
1.1	5635	1.4	1237	65000	**A804_1237 S2 M2SA4**	311	**A804_1237 P80 BN80B4**	312
1.1	5568	2.5	1222	75000	**A904_1222 S2 M2SA4**	314	**A904_1222 P80 BN80B4**	315
1.2	5291	0.9	1161	50000	**A704_1161 S2 M2SA4**	308	**A704_1161 P80 BN80B4**	309
1.3	5060	2.8	1111	75000	**A904_1111 S2 M2SA4**	314	**A904_1111 P80 BN80B4**	315
1.3	4942	1.6	1085	65000	**A804_1085 S2 M2SA4**	311	**A804_1085 P80 BN80B4**	312
1.3	4884	1.0	1072	50000	**A704_1072 S2 M2SA4**	308	**A704_1072 P80 BN80B4**	309
1.4	4670	3.0	1025	75000	**A904_1025 S2 M2SA4**	314	**A904_1025 P80 BN80B4**	315
1.4	4562	1.8	1001	65000	**A804_1001 S2 M2SA4**	311	**A804_1001 P80 BN80B4**	312
1.5	4270	3.3	937.2	75000	**A904_937.2 S2 M2SA4**	314	**A904_937.2 P80 BN80B4**	315
1.5	4221	1.2	926.5	50000	**A704_926.5 S2 M2SA4**	308	**A704_926.5 P80 BN80B4**	309
1.6	4094	2.0	898.7	65000	**A804_898.7 S2 M2SA4**	311	**A804_898.7 P80 BN80B4**	312
1.6	3896	1.3	855.3	50000	**A704_855.3 S2 M2SA4**	308	**A704_855.3 P80 BN80B4**	309
1.7	3779	2.1	829.5	65000	**A804_829.5 S2 M2SA4**	311	**A804_829.5 P80 BN80B4**	312
1.8	3480	1.4	763.9	50000	**A704_763.9 S2 M2SA4**	308	**A704_763.9 P80 BN80B4**	309
1.8	3472	2.3	762.1	65000	**A804_762.1 S2 M2SA4**	311	**A804_762.1 P80 BN80B4**	312
2.0	3212	1.6	705.1	50000	**A704_705.1 S2 M2SA4**	308	**A704_705.1 P80 BN80B4**	309
2.0	3205	2.5	703.5	65000	**A804_703.5 S2 M2SA4**	311	**A804_703.5 P80 BN80B4**	312
2.0	3177	0.9	697.3	30000	**A604_697.3 S2 M2SA4**	304	**A604_697.3 P80 BN80B4**	305
2.2	2937	1.7	644.6	50000	**A704_644.6 S2 M2SA4**	308	**A704_644.6 P80 BN80B4**	309
2.2	2891	1.0	634.6	30000	**A604_634.6 S2 M2SA4**	304	**A604_634.6 P80 BN80B4**	305
2.3	2766	2.9	607.2	65000	**A804_607.2 S2 M2SA4**	311	**A804_607.2 P80 BN80B4**	312
2.4	2711	1.8	595.0	50000	**A704_595.0 S2 M2SA4**	308	**A704_595.0 P80 BN80B4**	309
2.4	2669	1.0	585.8	30000	**A604_585.8 S2 M2SA4**	304	**A604_585.8 P80 BN80B4**	305
2.5	2553	3.1	560.5	65000	**A804_560.5 S2 M2SA4**	311	**A804_560.5 P80 BN80B4**	312
2.6	2469	1.1	542.0	30000	**A604_542.0 S2 M2SA4**	304	**A604_542.0 P80 BN80B4**	305
2.7	2348	2.1	515.4	50000	**A704_515.4 S2 M2SA4**	308	**A704_515.4 P80 BN80B4**	309
2.8	2279	1.2	500.3	30000	**A604_500.3 S2 M2SA4**	304	**A604_500.3 P80 BN80B4**	305

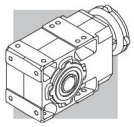

0.75 kW

n_2 min^{-1}	M_2 Nm	S	i	R_{n2} N			IEC	
2.9	2167	2.3	475.8	50000	**A704_475.8 S2 M2SA4**	308	**A704_475.8 P80 BN80B4**	309
3.2	1997	1.4	438.4	30000	**A604_438.4 S2 M2SA4**	304	**A604_438.4 P80 BN80B4**	305
3.5	1844	1.5	404.7	30000	**A604_404.7 S2 M2SA4**	304	**A604_404.7 P80 BN80B4**	305
3.5	1823	2.7	400.2	50000	**A704_400.2 S2 M2SA4**	308	**A704_400.2 P80 BN80B4**	309
3.8	1683	3.0	369.4	50000	**A704_369.4 S2 M2SA4**	308	**A704_369.4 P80 BN80B4**	309
3.8	1666	0.9	365.6	20000	**A504_365.6 S2 M2SA4**	296	**A504_365.6 P80 BN80B4**	297
4.0	1600	1.8	351.2	30000	**A604_351.2 S2 M2SA4**	304	**A604_351.2 P80 BN80B4**	305
4.2	1515	1.0	332.6	20000	**A504_332.6 S2 M2SA4**	296	**A504_332.6 P80 BN80B4**	297
4.3	1477	1.9	324.2	30000	**A604_324.2 S2 M2SA4**	304	**A604_324.2 P80 BN80B4**	305
4.4	1441	3.5	316.4	50000	**A704_316.4 S2 M2SA4**	308	**A704_316.4 P80 BN80B4**	309
4.9	1307	1.1	286.8	20000	**A504_286.8 S2 M2SA4**	296	**A504_286.8 P80 BN80B4**	297
4.9	1304	2.1	286.3	30000	**A604_286.3 S2 M2SA4**	304	**A604_286.3 P80 BN80B4**	305
5.3	1204	2.3	264.3	30000	**A604_264.3 S2 M2SA4**	304	**A604_264.3 P80 BN80B4**	305
5.4	1189	1.3	260.9	20000	**A504_260.9 S2 M2SA4**	296	**A504_260.9 P80 BN80B4**	297
6.0	1057	1.4	232.0	20000	**A504_232.0 S2 M2SA4**	296	**A504_232.0 P80 BN80B4**	297
6.2	1030	2.7	226.1	30000	**A604_226.1 S2 M2SA4**	304	**A604_226.1 P80 BN80B4**	305
6.6	961	1.6	211.0	20000	**A504_211.0 S2 M2SA4**	296	**A504_211.0 P80 BN80B4**	297
6.7	951	2.9	208.7	30000	**A604_208.7 S2 M2SA4**	304	**A604_208.7 P80 BN80B4**	305
7.1	920	0.9	197.5	15000	**A413_197.5 S2 M2SA4**	292	**A413_197.5 P80 BN80B4**	293
7.2	905	2.2	194.2	30000	**A553_194.2 S2 M2SA4**	300	**A553_194.2 P80 BN80B4**	301
7.3	888	1.7	190.6	20000	**A503_190.6 S2 M2SA4**	296	**A503_190.6 P80 BN80B4**	297
7.5	865	3.2	185.8	30000	**A603_185.8 S2 M2SA4**	304	**A603_185.8 P80 BN80B4**	305
7.6	859	1.0	184.4	15000	**A413_184.4 S2 M2SA4**	292	**A413_184.4 P80 BN80B4**	293
8.0	815	2.5	175.0	30000	**A553_175.0 S2 M2SA4**	300	**A553_175.0 P80 BN80B4**	301
8.1	808	1.9	173.4	20000	**A503_173.4 S2 M2SA4**	296	**A503_173.4 P80 BN80B4**	297
8.2	799	3.5	171.5	30000	**A603_171.5 S2 M2SA4**	304	**A603_171.5 P80 BN80B4**	305
8.7	747	2.7	160.4	30000	**A553_160.4 S2 M2SA4**	300	**A553_160.4 P80 BN80B4**	301
9.1	720	2.1	154.6	20000	**A503_154.6 S2 M2SA4**	296	**A503_154.6 P80 BN80B4**	297
9.5	684	1.2	146.9	15000	**A413_146.9 S2 M2SA4**	292	**A413_146.9 P80 BN80B4**	293
9.5	684	2.9	146.8	30000	**A553_146.8 S2 M2SA4**	300	**A553_146.8 P80 BN80B4**	301
10.0	655	2.3	140.6	20000	**A503_140.6 S2 M2SA4**	296	**A503_140.6 P80 BN80B4**	297
10.3	635	0.9	136.3	12000	**A353_136.3 S2 M2SA4**	288	**A353_136.3 P80 BN80B4**	289
10.5	618	3.2	132.7	30000	**A553_132.7 S2 M2SA4**	300	**A553_132.7 P80 BN80B4**	301
10.8	604	2.5	129.7	20000	**A503_129.7 S2 M2SA4**	296	**A503_129.7 P80 BN80B4**	297
11.3	577	3.5	123.9	30000	**A553_123.9 S2 M2SA4**	300	**A553_123.9 P80 BN80B4**	301
11.9	549	2.7	118.0	20000	**A503_118.0 S2 M2SA4**	296	**A503_118.0 P80 BN80B4**	297
12.0	545	1.0	116.9	12000	**A353_116.9 S2 M2SA4**	288	**A353_116.9 P80 BN80B4**	289
12.1	540	1.6	115.9	15000	**A413_115.9 S2 M2SA4**	292	**A413_115.9 P80 BN80B4**	293
12.8	510	2.9	109.4	20000	**A503_109.4 S2 M2SA4**	296	**A503_109.4 P80 BN80B4**	297
13.3	492	1.1	105.5	12000	**A353_105.5 S2 M2SA4**	288	**A353_105.5 P80 BN80B4**	289
14.1	464	3.2	99.5	20000	**A503_99.5 S2 M2SA4**	296	**A503_99.5 P80 BN80B4**	297
14.6	460	1.2	95.6	12000	**A352_95.6 S2 M2SA4**	288	**A352_95.6 P80 BN80B4**	289
15.1	432	1.9	92.8	15000	**A413_92.8 S2 M2SA4**	292	**A413_92.8 P80 BN80B4**	293
17.0	397	1.5	82.5	12000	**A352_82.5 S2 M2SA4**	288	**A352_82.5 P80 BN80B4**	289
17.7	381	2.2	79.2	15000	**A412_79.2 S2 M2SA4**	292	**A412_79.2 P80 BN80B4**	293
18.3	368	1.0	76.5	8580	**A302_76.5 S2 M2SA4**	284	**A302_76.5 P80 BN80B4**	285
18.8	357	1.7	74.3	12000	**A352_74.3 S2 M2SA4**	288	**A352_74.3 P80 BN80B4**	289
19.6	343	2.5	71.3	15000	**A412_71.3 S2 M2SA4**	292	**A412_71.3 P80 BN80B4**	293
21.2	318	1.2	66.0	8360	**A302_66.0 S2 M2SA4**	284	**A302_66.0 P80 BN80B4**	285
21.3	317	1.9	65.8	12000	**A352_65.8 S2 M2SA4**	288	**A352_65.8 P80 BN80B4**	289
21.8	309	2.8	64.2	15000	**A412_64.2 S2 M2SA4**	292	**A412_64.2 P80 BN80B4**	293

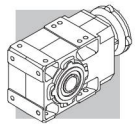

0.75 kW

n_2 min^{-1}	M_2 Nm	S	i	R_{n2} N			IEC	
23.2	290	2.1	60.4	12000	**A352_60.4 S2 M2SA4**	288	**A352_60.4 P80 BN80B4**	289
23.6	286	1.4	59.4	8190	**A302_59.4 S2 M2SA4**	284	**A302_59.4 P80 BN80B4**	285
23.8	283	3.0	58.8	15000	**A412_58.8 S2 M2SA4**	292	**A412_58.8 P80 BN80B4**	293
25.8	261	2.3	54.3	12000	**A352_54.3 S2 M2SA4**	288	**A352_54.3 P80 BN80B4**	289
26.1	258	1.0	53.7	5210	**A202_53.7 S2 M2SA4**	280	**A202_53.7 P80 BN80B4**	281
26.3	256	3.3	53.1	15000	**A412_53.1 S2 M2SA4**	292	**A412_53.1 P80 BN80B4**	293
26.6	253	1.6	52.7	7990	**A302_52.7 S2 M2SA4**	284	**A302_52.7 P80 BN80B4**	285
28.5	236	2.5	49.1	12000	**A352_49.1 S2 M2SA4**	288	**A352_49.1 P80 BN80B4**	289
29.0	232	1.1	48.3	5140	**A202_48.3 S2 M2SA4**	280	**A202_48.3 P80 BN80B4**	281
29.0	232	1.8	48.3	7840	**A302_48.3 S2 M2SA4**	284	**A302_48.3 P80 BN80B4**	285
31	220	2.7	45.8	12000	**A352_45.8 S2 M2SA4**	288	**A352_45.8 P80 BN80B4**	289
32	209	2.0	43.4	7660	**A302_43.4 S2 M2SA4**	284	**A302_43.4 P80 BN80B4**	285
32	208	1.2	43.2	5060	**A202_43.2 S2 M2SA4**	280	**A202_43.2 P80 BN80B4**	281
34	201	3.0	41.8	11900	**A352_41.8 S2 M2SA4**	288	**A352_41.8 P80 BN80B4**	289
35	191	1.3	39.6	4990	**A202_39.6 S2 M2SA4**	280	**A202_39.6 P80 BN80B4**	281
36	189	2.2	39.3	7480	**A302_39.3 S2 M2SA4**	284	**A302_39.3 P80 BN80B4**	285
38	176	2.3	36.6	7360	**A302_36.6 S2 M2SA4**	284	**A302_36.6 P80 BN80B4**	285
38	176	3.4	36.6	11500	**A352_36.6 S2 M2SA4**	288	**A352_36.6 P80 BN80B4**	289
40	170	1.5	35.4	4890	**A202_35.4 S2 M2SA4**	280	**A202_35.4 P80 BN80B4**	281
40	169	0.9	35.1	4320	**A102_35.1 S2 M2SA4**	276	**A102_35.1 P80 BN80B4**	277
42	161	2.5	33.4	7200	**A302_33.4 S2 M2SA4**	284	**A302_33.4 P80 BN80B4**	285
43	155	1.0	32.2	5080	**A102_32.2 S2 M2SA4**	276	**A102_32.2 P80 BN80B4**	277
45	151	1.7	31.3	4780	**A202_31.3 S2 M2SA4**	280	**A202_31.3 P80 BN80B4**	281
48	141	2.9	29.3	6960	**A302_29.3 S2 M2SA4**	284	**A302_29.3 P80 BN80B4**	285
48	141	1.8	29.2	4710	**A202_29.2 S2 M2SA4**	280	**A202_29.2 P80 BN80B4**	281
49	137	1.1	28.6	4200	**A102_28.6 S2 M2SA4**	276	**A102_28.6 P80 BN80B4**	277
53	128	3.2	26.5	6790	**A302_26.5 S2 M2SA4**	284	**A302_26.5 P80 BN80B4**	285
53	127	2.0	26.5	4620	**A202_26.5 S2 M2SA4**	280	**A202_26.5 P80 BN80B4**	281
55	123	1.2	25.5	4900	**A102_25.5 S2 M2SA4**	276	**A102_25.5 P80 BN80B4**	277
59	114	1.3	23.8	4070	**A102_23.8 S2 M2SA4**	276	**A102_23.8 P80 BN80B4**	277
61	111	2.2	23.1	4480	**A202_23.1 S2 M2SA4**	280	**A202_23.1 P80 BN80B4**	281
66	103	1.0	21.4	2210	**A052_21.4 S2 M2SA4**	273	**A052_21.4 P80 BN80B4**	273
66	103	1.5	21.4	4740	**A102_21.4 S2 M2SA4**	276	**A102_21.4 P80 BN80B4**	277
66	102	2.4	21.2	4390	**A202_21.2 S2 M2SA4**	280	**A202_21.2 P80 BN80B4**	281
75	89	1.1	18.6	2190	**A052_18.6 S2 M2SA4**	273	**A052_18.6 P80 BN80B4**	273
75	89	1.7	18.6	3880	**A102_18.6 S2 M2SA4**	276	**A102_18.6 P80 BN80B4**	277
77	87	2.9	18.1	4230	**A202_18.1 S2 M2SA4**	280	**A202_18.1 P80 BN80B4**	281
85	79	1.3	16.4	2160	**A052_16.4 S2 M2SA4**	273	**A052_16.4 P80 BN80B4**	273
85	79	1.9	16.4	4490	**A102_16.4 S2 M2SA4**	276	**A102_16.4 P80 BN80B4**	277
87	78	3.2	16.2	4110	**A202_16.2 S2 M2SA4**	280	**A202_16.2 P80 BN80B4**	281
101	67	1.5	13.9	2110	**A052_13.9 S2 M2SA4**	273	**A052_13.9 P80 BN80B4**	273
101	67	2.2	13.9	3640	**A102_13.9 S2 M2SA4**	276	**A102_13.9 P80 BN80B4**	277
114	59	1.7	12.3	2080	**A052_12.3 S2 M2SA4**	273	**A052_12.3 P80 BN80B4**	273
114	59	2.4	12.3	3530	**A102_12.3 S2 M2SA4**	276	**A102_12.3 P80 BN80B4**	277
133	51	2.0	10.6	2010	**A052_10.6 S2 M2SA4**	273	**A052_10.6 P80 BN80B4**	273
133	51	3.0	10.6	3400	**A102_10.6 S2 M2SA4**	276	**A102_10.6 P80 BN80B4**	277
146	46	2.2	9.6	1990	**A052_9.6 S2 M2SA4**	273	**A052_9.6 P80 BN80B4**	273
146	46	3.0	9.6	3320	**A102_9.6 S2 M2SA4**	276	**A102_9.6 P80 BN80B4**	277
164	41	2.4	8.5	1940	**A052_8.5 S2 M2SA4**	273	**A052_8.5 P80 BN80B4**	273
164	41	3.4	8.5	3820	**A102_8.5 S2 M2SA4**	276	**A102_8.5 P80 BN80B4**	277
194	35	2.9	7.2	1870	**A052_7.2 S2 M2SA4**	273	**A052_7.2 P80 BN80B4**	273

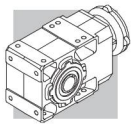

0.75 kW

n_2 min^{-1}	M_2 Nm	S	i	R_{n2} N			IEC	
221	30	3.3	6.3	1810	**A052_6.3 S2 M2SA4**	273	**A052_6.3 P80 BN80B4**	273
256	26	3.6	5.5	1750	**A052_5.5 S2 M2SA4**	273	**A052_5.5 P80 BN80B4**	273
266	25	3.2	10.6	1720	**A052_10.6 S1 M1LA2**	273	**A052_10.6 P80 BN80A2**	273
292	23	4.1	9.6	1690	**A052_9.6 S1 M1LA2**	273	**A052_9.6 P80 BN80A2**	273
330	20	4.4	8.5	1640	**A052_8.5 S1 M1LA2**	273	**A052_8.5 P80 BN80A2**	273
390	17.3	4.9	7.2	1570	**A052_7.2 S1 M1LA2**	273	**A052_7.2 P80 BN80A2**	273
444	15.2	5.3	6.3	1510	**A052_6.3 S1 M1LA2**	273	**A052_6.3 P80 BN80A2**	273
514	13.1	5.7	5.5	1450	**A052_5.5 S1 M1LA2**	273	**A052_5.5 P80 BN80A2**	273

1.1 kW

n_2 min^{-1}	M_2 Nm	S	i	R_{n2} N			IEC	
0.61	15320	0.9	1507	75000	**A904_1507 S3 M3SA6**	314	**A904_1507 P90 BN90L6**	315
0.69	13462	1.0	1324	75000	**A904_1324 S3 M3SA6**	314	**A904_1324 P90 BN90L6**	315
0.75	12427	1.1	1222	75000	**A904_1222 S3 M3SA6**	314	**A904_1222 P90 BN90L6**	315
0.86	10907	1.3	1632	75000	**A904_1632 S2 M2SB4**	314	**A904_1632 P90 BN90S4**	315
0.93	10068	1.4	1507	75000	**A904_1507 S2 M2SB4**	314	**A904_1507 P90 BN90S4**	315
1.0	8953	0.9	1340	65000	**A804_1340 S2 M2SB4**	311	**A804_1340 P90 BN90S4**	312
1.1	8847	1.6	1324	75000	**A904_1324 S2 M2SB4**	314	**A904_1324 P90 BN90S4**	315
1.1	8264	1.0	1237	65000	**A804_1237 S2 M2SB4**	311	**A804_1237 P90 BN90S4**	312
1.1	8166	1.7	1222	75000	**A904_1222 S2 M2SB4**	314	**A904_1222 P90 BN90S4**	315
1.3	7421	1.9	1111	75000	**A904_1111 S2 M2SB4**	314	**A904_1111 P90 BN90S4**	315
1.3	7249	1.1	1085	65000	**A804_1085 S2 M2SB4**	311	**A804_1085 P90 BN90S4**	312
1.4	6850	2.0	1025	75000	**A904_1025 S2 M2SB4**	314	**A904_1025 P90 BN90S4**	315
1.4	6691	1.2	1001	65000	**A804_1001 S2 M2SB4**	311	**A804_1001 P90 BN90S4**	312
1.5	6262	2.2	937.2	75000	**A904_937.2 S2 M2SB4**	314	**A904_937.2 P90 BN90S4**	315
1.6	6005	1.3	898.7	65000	**A804_898.7 S2 M2SB4**	311	**A804_898.7 P90 BN90S4**	312
1.6	5780	2.4	865.1	75000	**A904_865.1 S2 M2SB4**	314	**A904_865.1 P90 BN90S4**	315
1.6	5715	0.9	855.3	50000	**A704_855.3 S2 M2SB4**	308	**A704_855.3 P90 BN90S4**	309
1.7	5543	1.4	829.5	65000	**A804_829.5 S2 M2SB4**	311	**A804_829.5 P90 BN90S4**	312
1.8	5124	2.7	766.9	75000	**A904_766.9 S2 M2SB4**	314	**A904_766.9 P90 BN90S4**	315
1.8	5104	1.0	763.9	50000	**A704_763.9 S2 M2SB4**	308	**A704_763.9 P90 BN90S4**	309
1.8	5092	1.6	762.1	65000	**A804_762.1 S2 M2SB4**	311	**A804_762.1 P90 BN90S4**	312
2.0	4730	3.0	707.9	75000	**A904_707.9 S2 M2SB4**	314	**A904_707.9 P90 BN90S4**	315
2.0	4711	1.1	705.1	50000	**A704_705.1 S2 M2SB4**	308	**A704_705.1 P90 BN90S4**	309
2.0	4700	1.7	703.5	65000	**A804_703.5 S2 M2SB4**	311	**A804_703.5 P90 BN90S4**	312
2.2	4307	1.2	644.6	50000	**A704_644.6 S2 M2SB4**	308	**A704_644.6 P90 BN90S4**	309
2.3	4057	2.0	607.2	65000	**A804_607.2 S2 M2SB4**	311	**A804_607.2 P90 BN90S4**	312
2.3	4019	3.5	601.6	75000	**A904_601.6 S2 M2SB4**	314	**A904_601.6 P90 BN90S4**	315
2.4	3976	1.3	595.0	50000	**A704_595.0 S2 M2SB4**	308	**A704_595.0 P90 BN90S4**	309
2.5	3745	2.1	560.5	65000	**A804_560.5 S2 M2SB4**	311	**A804_560.5 P90 BN90S4**	312
2.7	3444	1.5	515.4	50000	**A704_515.4 S2 M2SB4**	308	**A704_515.4 P90 BN90S4**	309
2.9	3200	2.5	478.9	65000	**A804_478.9 S2 M2SB4**	311	**A804_478.9 P90 BN90S4**	312
2.9	3179	1.6	475.8	50000	**A704_475.8 S2 M2SB4**	308	**A704_475.8 P90 BN90S4**	309
3.2	2954	2.7	442.1	65000	**A804_442.1 S2 M2SB4**	311	**A804_442.1 P90 BN90S4**	312
3.2	2929	1.0	438.4	30000	**A604_438.4 S2 M2SB4**	304	**A604_438.4 P90 BN90S4**	305
3.5	2704	1.0	404.7	30000	**A604_404.7 S2 M2SB4**	304	**A604_404.7 P90 BN90S4**	305
3.5	2674	1.9	400.2	50000	**A704_400.2 S2 M2SB4**	308	**A704_400.2 P90 BN90S4**	309

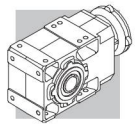

1.1 kW

n_2 min^{-1}	M_2 Nm	S	i	R_{n2} N	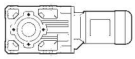			
3.7	2562	3.1	383.5	65000	**A804_383.5 S2 M2SB4**	311	**A804_383.5 P90 BN90S4**	312
3.8	2468	2.0	369.4	50000	**A704_369.4 S2 M2SB4**	308	**A704_369.4 P90 BN90S4**	309
4.0	2365	3.4	354.0	65000	**A804_354.0 S2 M2SB4**	311	**A804_354.0 P90 BN90S4**	312
4.0	2347	1.2	351.2	30000	**A604_351.2 S2 M2SB4**	304	**A604_351.2 P90 BN90S4**	305
4.3	2166	1.3	324.2	30000	**A604_324.2 S2 M2SB4**	304	**A604_324.2 P90 BN90S4**	305
4.4	2114	2.4	316.4	50000	**A704_316.4 S2 M2SB4**	308	**A704_316.4 P90 BN90S4**	309
4.8	1951	2.6	292.0	50000	**A704_292.0 S2 M2SB4**	308	**A704_292.0 P90 BN90S4**	309
4.9	1913	1.5	286.3	30000	**A604_286.3 S2 M2SB4**	304	**A604_286.3 P90 BN90S4**	305
5.3	1766	1.6	264.3	30000	**A604_264.3 S2 M2SB4**	304	**A604_264.3 P90 BN90S4**	305
5.4	1743	0.9	260.9	20000	**A504_260.9 S2 M2SB4**	296	**A504_260.9 P90 BN90S4**	297
5.9	1594	3.1	238.6	50000	**A704_238.6 S2 M2SB4**	308	**A704_238.6 P90 BN90S4**	309
6.0	1550	1.0	232.0	20000	**A504_232.0 S2 M2SB4**	296	**A504_232.0 P90 BN90S4**	297
6.2	1511	1.9	226.1	30000	**A604_226.1 S2 M2SB4**	304	**A604_226.1 P90 BN90S4**	305
6.4	1472	3.4	220.3	50000	**A704_220.3 S2 M2SB4**	308	**A704_220.3 P90 BN90S4**	309
6.6	1410	1.1	211.0	20000	**A504_211.0 S2 M2SB4**	296	**A504_211.0 P90 BN90S4**	297
6.7	1395	2.0	208.7	30000	**A604_208.7 S2 M2SB4**	304	**A604_208.7 P90 BN90S4**	305
7.2	1327	1.5	194.2	30000	**A553_194.2 S2 M2SB4**	300	**A553_194.2 P90 BN90S4**	301
7.3	1302	1.2	190.6	20000	**A503_190.6 S2 M2SB4**	296	**A503_190.6 P90 BN90S4**	297
7.5	1269	2.2	185.8	30000	**A603_185.8 S2 M2SB4**	304	**A603_185.8 P90 BN90S4**	305
8.0	1196	1.7	175.0	30000	**A553_175.0 S2 M2SB4**	300	**A553_175.0 P90 BN90S4**	301
8.1	1184	1.3	173.4	20000	**A503_173.4 S2 M2SB4**	296	**A503_173.4 P90 BN90S4**	297
8.2	1171	2.4	171.5	30000	**A603_171.5 S2 M2SB4**	304	**A603_171.5 P90 BN90S4**	305
8.7	1096	1.8	160.4	30000	**A553_160.4 S2 M2SB4**	300	**A553_160.4 P90 BN90S4**	301
9.0	1066	2.6	156.0	30000	**A603_156.0 S2 M2SB4**	304	**A603_156.0 P90 BN90S4**	305
9.1	1056	1.4	154.6	20000	**A503_154.6 S2 M2SB4**	296	**A503_154.6 P90 BN90S4**	297
9.5	1003	2.0	146.8	30000	**A553_146.8 S2 M2SB4**	300	**A553_146.8 P90 BN90S4**	301
9.7	984	2.8	144.0	30000	**A603_144.0 S2 M2SB4**	304	**A603_144.0 P90 BN90S4**	305
10.0	961	1.6	140.6	20000	**A503_140.6 S2 M2SB4**	296	**A503_140.6 P90 BN90S4**	297
10.5	911	3.1	133.3	30000	**A603_133.3 S2 M2SB4**	304	**A603_133.3 P90 BN90S4**	305
10.5	907	2.2	132.7	30000	**A553_132.7 S2 M2SB4**	300	**A553_132.7 P90 BN90S4**	301
10.8	886	1.7	129.7	20000	**A503_129.7 S2 M2SB4**	296	**A503_129.7 P90 BN90S4**	297
11.3	846	2.4	123.9	30000	**A553_123.9 S2 M2SB4**	300	**A553_123.9 P90 BN90S4**	301
11.4	841	3.3	123.0	30000	**A603_123.0 S2 M2SB4**	304	**A603_123.0 P90 BN90S4**	305
11.9	806	1.9	118.0	20000	**A503_118.0 S2 M2SB4**	296	**A503_118.0 P90 BN90S4**	297
12.1	792	1.1	115.9	15000	**A413_115.9 S2 M2SB4**	292	**A413_115.9 P90 BN90S4**	293
12.8	748	2.0	109.4	20000	**A503_109.4 S2 M2SB4**	296	**A503_109.4 P90 BN90S4**	297
13.8	693	2.9	101.4	30000	**A553_101.4 S2 M2SB4**	300	**A553_101.4 P90 BN90S4**	301
14.1	680	2.2	99.5	20000	**A503_99.5 S2 M2SB4**	296	**A503_99.5 P90 BN90S4**	297
15.1	634	1.3	92.8	15000	**A413_92.8 S2 M2SB4**	292	**A413_92.8 P90 BN90S4**	293
15.6	612	2.5	89.5	20000	**A503_89.5 S2 M2SB4**	296	**A503_89.5 P90 BN90S4**	297
17.0	582	1.0	82.5	12000	**A352_82.5 S2 M2SB4**	288	**A352_82.5 P90 BN90S4**	289
17.2	556	2.7	81.5	20000	**A503_81.5 S2 M2SB4**	296	**A503_81.5 P90 BN90S4**	297
17.7	559	1.5	79.2	15000	**A412_79.2 S2 M2SB4**	292	**A412_79.2 P90 BN90S4**	293
18.8	524	1.1	74.3	12000	**A352_74.3 S2 M2SB4**	288	**A352_74.3 P90 BN90S4**	289
19.6	503	1.7	71.3	15000	**A412_71.3 S2 M2SB4**	292	**A412_71.3 P90 BN90S4**	293
19.9	480	3.1	70.2	20000	**A503_70.2 S2 M2SB4**	296	**A503_70.2 P90 BN90S4**	297
21.3	465	1.3	65.8	12000	**A352_65.8 S2 M2SB4**	288	**A352_65.8 P90 BN90S4**	289
21.8	453	1.9	64.2	15000	**A412_64.2 S2 M2SB4**	292	**A412_64.2 P90 BN90S4**	293
21.9	436	3.4	63.9	20000	**A503_63.9 S2 M2SB4**	296	**A503_63.9 P90 BN90S4**	297
23.2	426	1.4	60.4	12000	**A352_60.4 S2 M2SB4**	288	**A352_60.4 P90 BN90S4**	289
23.6	419	1.0	59.4	7420	**A302_59.4 S2 M2SB4**	284	**A302_59.4 P90 BN90S4**	285

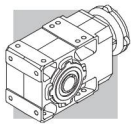

1.1 kW

n_2 min^{-1}	M_2 Nm	S	i	R_{n2} N			IEC	
23.8	415	2.0	58.8	15000	**A412_58.8 S2 M2SB4**	292	**A412_58.8 P90 BN90S4**	293
25.8	383	1.6	54.3	12000	**A352_54.3 S2 M2SB4**	288	**A352_54.3 P90 BN90S4**	289
26.3	375	2.3	53.1	15000	**A412_53.1 S2 M2SB4**	292	**A412_53.1 P90 BN90S4**	293
26.6	372	1.1	52.7	7310	**A302_52.7 S2 M2SB4**	284	**A302_52.7 P90 BN90S4**	285
28.5	346	1.7	49.1	11800	**A352_49.1 S2 M2SB4**	288	**A352_49.1 P90 BN90S4**	289
29.0	341	1.2	48.3	7220	**A302_48.3 S2 M2SB4**	284	**A302_48.3 P90 BN90S4**	285
29.0	341	2.5	48.3	15000	**A412_48.3 S2 M2SB4**	292	**A412_48.3 P90 BN90S4**	293
31	323	1.9	45.8	11700	**A352_45.8 S2 M2SB4**	288	**A352_45.8 P90 BN90S4**	289
31	318	2.6	45.1	15000	**A412_45.1 S2 M2SB4**	292	**A412_45.1 P90 BN90S4**	293
32	306	1.3	43.4	7100	**A302_43.4 S2 M2SB4**	284	**A302_43.4 P90 BN90S4**	285
34	295	2.0	41.8	11400	**A352_41.8 S2 M2SB4**	288	**A352_41.8 P90 BN90S4**	289
36	277	1.5	39.3	6970	**A302_39.3 S2 M2SB4**	284	**A302_39.3 P90 BN90S4**	285
38	259	1.6	36.6	6880	**A302_36.6 S2 M2SB4**	284	**A302_36.6 P90 BN90S4**	285
38	258	2.3	36.6	11100	**A352_36.6 S2 M2SB4**	288	**A352_36.6 P90 BN90S4**	289
39	253	3.1	35.9	14300	**A412_35.9 S2 M2SB4**	292	**A412_35.9 P90 BN90S4**	293
40	250	1.0	35.4	4380	**A202_35.4 S2 M2SB4**	280	**A202_35.4 P90 BN90S4**	281
42	236	1.7	33.4	6760	**A302_33.4 S2 M2SB4**	284	**A302_33.4 P90 BN90S4**	285
42	234	2.6	33.2	10800	**A352_33.2 S2 M2SB4**	288	**A352_33.2 P90 BN90S4**	289
45	221	1.1	31.3	4320	**A202_31.3 S2 M2SB4**	280	**A202_31.3 P90 BN90S4**	281
48	207	2.0	29.3	6580	**A302_29.3 S2 M2SB4**	284	**A302_29.3 P90 BN90S4**	285
48	206	1.2	29.2	4290	**A202_29.2 S2 M2SB4**	280	**A202_29.2 P90 BN90S4**	281
49	201	3.0	28.4	10400	**A352_28.4 S2 M2SB4**	288	**A352_28.4 P90 BN90S4**	289
53	187	2.2	26.5	6440	**A302_26.5 S2 M2SB4**	284	**A302_26.5 P90 BN90S4**	285
53	187	1.3	26.5	4230	**A202_26.5 S2 M2SB4**	280	**A202_26.5 P90 BN90S4**	281
55	181	3.3	25.7	10100	**A352_25.7 S2 M2SB4**	288	**A352_25.7 P90 BN90S4**	289
59	168	0.9	23.8	3640	**A102_23.8 S2 M2SB4**	276	**A102_23.8 P90 BN90S4**	277
61	163	1.5	23.1	4140	**A202_23.1 S2 M2SB4**	280	**A202_23.1 P90 BN90S4**	281
62	161	2.6	22.8	6220	**A302_22.8 S2 M2SB4**	284	**A302_22.8 P90 BN90S4**	285
66	151	1.0	21.4	4280	**A102_21.4 S2 M2SB4**	276	**A102_21.4 P90 BN90S4**	277
66	150	1.7	21.2	4080	**A202_21.2 S2 M2SB4**	280	**A202_21.2 P90 BN90S4**	281
68	145	2.8	20.5	6070	**A302_20.5 S2 M2SB4**	284	**A302_20.5 P90 BN90S4**	285
75	131	1.1	18.6	3540	**A102_18.6 S2 M2SB4**	276	**A102_18.6 P90 BN90S4**	277
77	128	2.0	18.1	3970	**A202_18.1 S2 M2SB4**	280	**A202_18.1 P90 BN90S4**	281
78	127	3.2	18.0	5880	**A302_18.0 S2 M2SB4**	284	**A302_18.0 P90 BN90S4**	285
85	116	1.3	16.4	4130	**A102_16.4 S2 M2SB4**	276	**A102_16.4 P90 BN90S4**	277
86	115	3.3	16.3	5740	**A302_16.3 S2 M2SB4**	284	**A302_16.3 P90 BN90S4**	285
87	114	2.2	16.2	3880	**A202_16.2 S2 M2SB4**	280	**A202_16.2 P90 BN90S4**	281
99	99	2.5	14.1	3770	**A202_14.1 S2 M2SB4**	280	**A202_14.1 P90 BN90S4**	281
101	98	1.0	13.9	1840	**A052_13.9 S2 M2SB4**	273		
101	98	1.5	13.9	3380	**A102_13.9 S2 M2SB4**	276	**A102_13.9 P90 BN90S4**	277
114	87	1.2	12.3	1850	**A052_12.3 S2 M2SB4**	273		
114	87	1.6	12.3	3300	**A102_12.3 S2 M2SB4**	276	**A102_12.3 P90 BN90S4**	277
117	84	2.5	12.0	3620	**A202_12.0 S2 M2SB4**	280	**A202_12.0 P90 BN90S4**	281
133	75	1.3	10.6	1810	**A052_10.6 S2 M2SB4**	273		
133	75	2.0	10.6	3210	**A102_10.6 S2 M2SB4**	276	**A102_10.6 P90 BN90S4**	277
135	73	3.1	10.3	3510	**A202_10.3 S2 M2SB4**	280	**A202_10.3 P90 BN90S4**	281
146	68	1.5	9.6	1810	**A052_9.6 S2 M2SB4**	273		
146	68	2.1	9.6	3140	**A102_9.6 S2 M2SB4**	276	**A102_9.6 P90 BN90S4**	277
149	66	3.2	9.4	3420	**A202_9.4 S2 M2SB4**	280	**A202_9.4 P90 BN90S4**	281
164	60	1.7	8.5	1780	**A052_8.5 S2 M2SB4**	273		
164	60	2.3	8.5	3630	**A102_8.5 S2 M2SB4**	276	**A102_8.5 P90 BN90S4**	277

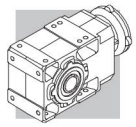

1.1 kW

n_2 min^{-1}	M_2 Nm	S	i	R_{n2} N			IEC	
194	51	2.0	7.2	1730	**A052_7.2 S2 M2SB4**	273		
194	51	2.8	7.2	2940	**A102_7.2 S2 M2SB4**	276	**A102_7.2 P90 BN90S4**	277
221	45	2.2	6.3	1690	**A052_6.3 S2 M2SB4**	273		
221	45	3.1	6.3	3390	**A102_6.3 S2 M2SB4**	276	**A102_6.3 P90 BN90S4**	277
228	43	3.2	12.3	2830	**A102_12.3 S2 M2SA2**	276	**A102_12.3 P80 BN80B2**	277
256	39	2.5	5.5	1640	**A052_5.5 S2 M2SB4**	273		
291	34	2.8	9.6	1600	**A052_9.6 S2 M2SA2**	273	**A052_9.6 P80 BN80B2**	273
329	30	3.0	8.5	1560	**A052_8.5 S2 M2SA2**	273	**A052_8.5 P80 BN80B2**	273
388	25	3.3	7.2	1500	**A052_7.2 S2 M2SA2**	273	**A052_7.2 P80 BN80B2**	273
442	22	3.6	6.3	1450	**A052_6.3 S2 M2SA2**	273	**A052_6.3 P80 BN80B2**	273
512	19.3	3.9	5.5	1400	**A052_5.5 S2 M2SA2**	273	**A052_5.5 P80 BN80B2**	273

1.5 kW

n_2 min^{-1}	M_2 Nm	S	i	R_{n2} N			IEC	
0.86	14767	0.9	1632	75000	**A904_1632 S3 M3SA4**	314	**A904_1632 P90 BN90LA4**	315
0.94	13631	1.0	1507	75000	**A904_1507 S3 M3SA4**	314	**A904_1507 P90 BN90LA4**	315
1.1	11978	1.2	1324	75000	**A904_1324 S3 M3SA4**	314	**A904_1324 P90 BN90LA4**	315
1.2	11057	1.3	1222	75000	**A904_1222 S3 M3SA4**	314	**A904_1222 P90 BN90LA4**	315
1.3	10047	1.4	1111	75000	**A904_1111 S3 M3SA4**	314	**A904_1111 P90 BN90LA4**	315
1.4	9274	1.5	1025	75000	**A904_1025 S3 M3SA4**	314	**A904_1025 P90 BN90LA4**	315
1.4	9060	0.9	1001	65000	**A804_1001 S3 M3SA4**	311	**A804_1001 P90 BN90LA4**	312
1.5	8478	1.7	937.2	75000	**A904_937.2 S3 M3SA4**	314	**A904_937.2 P90 BN90LA4**	315
1.6	8130	1.0	898.7	65000	**A804_898.7 S3 M3SA4**	311	**A804_898.7 P90 BN90LA4**	312
1.6	7826	1.8	865.1	75000	**A904_865.1 S3 M3SA4**	314	**A904_865.1 P90 BN90LA4**	315
1.7	7505	1.1	829.5	65000	**A804_829.5 S3 M3SA4**	311	**A804_829.5 P90 BN90LA4**	312
1.8	6938	2.0	766.9	75000	**A904_766.9 S3 M3SA4**	314	**A904_766.9 P90 BN90LA4**	315
1.9	6894	1.2	762.1	65000	**A804_762.1 S3 M3SA4**	311	**A804_762.1 P90 BN90LA4**	312
2.0	6404	2.2	707.9	75000	**A904_707.9 S3 M3SA4**	314	**A904_707.9 P90 BN90LA4**	315
2.0	6364	1.3	703.5	65000	**A804_703.5 S3 M3SA4**	311	**A804_703.5 P90 BN90LA4**	312
2.2	5832	0.9	644.6	50000	**A704_644.6 S3 M3SA4**	308	**A704_644.6 P90 BN90LA4**	309
2.3	5493	1.5	607.2	65000	**A804_607.2 S3 M3SA4**	311	**A804_607.2 P90 BN90LA4**	312
2.3	5442	2.6	601.6	75000	**A904_601.6 S3 M3SA4**	314	**A904_601.6 P90 BN90LA4**	315
2.4	5383	0.9	595.0	50000	**A704_595.0 S3 M3SA4**	308	**A704_595.0 P90 BN90LA4**	309
2.5	5070	1.6	560.5	65000	**A804_560.5 S3 M3SA4**	311	**A804_560.5 P90 BN90LA4**	312
2.5	5024	2.8	555.3	75000	**A904_555.3 S3 M3SA4**	314	**A904_555.3 P90 BN90LA4**	315
2.7	4663	1.1	515.4	50000	**A704_515.4 S3 M3SA4**	308	**A704_515.4 P90 BN90LA4**	309
2.9	4402	3.2	486.6	75000	**A904_486.6 S3 M3SA4**	314	**A904_486.6 P90 BN90LA4**	315
2.9	4333	1.8	478.9	65000	**A804_478.9 S3 M3SA4**	311	**A804_478.9 P90 BN90LA4**	312
3.0	4304	1.2	475.8	50000	**A704_475.8 S3 M3SA4**	308	**A704_475.8 P90 BN90LA4**	309
3.1	4063	3.4	449.2	75000	**A904_449.2 S3 M3SA4**	314	**A904_449.2 P90 BN90LA4**	315
3.2	3999	2.0	442.1	65000	**A804_442.1 S3 M3SA4**	311	**A804_442.1 P90 BN90LA4**	312
3.5	3620	1.4	400.2	50000	**A704_400.2 S3 M3SA4**	308	**A704_400.2 P90 BN90LA4**	309
3.7	3469	2.3	383.5	65000	**A804_383.5 S3 M3SA4**	311	**A804_383.5 P90 BN90LA4**	312
3.8	3342	1.5	369.4	50000	**A704_369.4 S3 M3SA4**	308	**A704_369.4 P90 BN90LA4**	309
4.0	3202	2.5	354.0	65000	**A804_354.0 S3 M3SA4**	311	**A804_354.0 P90 BN90LA4**	312
4.0	3177	0.9	351.2	30000	**A604_351.2 S3 M3SA4**	304	**A604_351.2 P90 BN90LA4**	305
4.3	2933	1.0	324.2	30000	**A604_324.2 S3 M3SA4**	304	**A604_324.2 P90 BN90LA4**	305

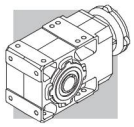

1.5 kW

n_2 min^{-1}	M_2 Nm	S	i	R_{n2} N			IEC	
4.5	2862	1.7	316.4	50000	**A704_316.4 S3 M3SA4**	308	**A704_316.4 P90 BN90LA4**	309
4.7	2718	2.9	300.4	65000	**A804_300.4 S3 M3SA4**	311	**A804_300.4 P90 BN90LA4**	312
4.8	2642	1.9	292.0	50000	**A704_292.0 S3 M3SA4**	308	**A704_292.0 P90 BN90LA4**	309
4.9	2590	1.1	286.3	30000	**A604_286.3 S3 M3SA4**	304	**A604_286.3 P90 BN90LA4**	305
5.1	2509	3.2	277.3	65000	**A804_277.3 S3 M3SA4**	311	**A804_277.3 P90 BN90LA4**	312
5.3	2391	1.2	264.3	30000	**A604_264.3 S3 M3SA4**	304	**A604_264.3 P90 BN90LA4**	305
5.9	2159	2.3	238.6	50000	**A704_238.6 S3 M3SA4**	308	**A704_238.6 P90 BN90LA4**	309
6.2	2046	1.4	226.1	30000	**A604_226.1 S3 M3SA4**	304	**A604_226.1 P90 BN90LA4**	305
6.4	1993	2.5	220.3	50000	**A704_220.3 S3 M3SA4**	308	**A704_220.3 P90 BN90LA4**	309
6.8	1888	1.5	208.7	30000	**A604_208.7 S3 M3SA4**	304	**A604_208.7 P90 BN90LA4**	305
7.3	1796	1.1	194.2	30000	**A553_194.2 S3 M3SA4**	300	**A553_194.2 P90 BN90LA4**	301
7.6	1718	1.6	185.8	30000	**A603_185.8 S3 M3SA4**	304	**A603_185.8 P90 BN90LA4**	305
7.7	1664	3.0	183.9	50000	**A704_183.9 S3 M3SA4**	308	**A704_183.9 P90 BN90LA4**	309
8.1	1619	1.2	175.0	30000	**A553_175.0 S3 M3SA4**	300	**A553_175.0 P90 BN90LA4**	301
8.1	1604	0.9	173.4	20000	**A503_173.4 S3 M3SA4**	296	**A503_173.4 P90 BN90LA4**	297
8.2	1586	1.8	171.5	30000	**A603_171.5 S3 M3SA4**	304	**A603_171.5 P90 BN90LA4**	305
8.3	1536	3.3	169.8	50000	**A704_169.8 S3 M3SA4**	308	**A704_169.8 P90 BN90LA4**	309
8.8	1484	1.3	160.4	30000	**A553_160.4 S3 M3SA4**	300	**A553_160.4 P90 BN90LA4**	301
9.0	1443	1.9	156.0	30000	**A603_156.0 S3 M3SA4**	304	**A603_156.0 P90 BN90LA4**	305
9.1	1430	1.0	154.6	20000	**A503_154.6 S3 M3SA4**	296	**A503_154.6 P90 BN90LA4**	297
9.2	1422	2.8	153.7	50000	**A703_153.7 S3 M3SA4**	308	**A703_153.7 P90 BN90LA4**	309
9.6	1358	1.5	146.8	30000	**A553_146.8 S3 M3SA4**	300	**A553_146.8 P90 BN90LA4**	301
9.8	1332	2.1	144.0	30000	**A603_144.0 S3 M3SA4**	304	**A603_144.0 P90 BN90LA4**	305
10.0	1301	1.2	140.6	20000	**A503_140.6 S3 M3SA4**	296	**A503_140.6 P90 BN90LA4**	297
10.6	1233	2.3	133.3	30000	**A603_133.3 S3 M3SA4**	304	**A603_133.3 P90 BN90LA4**	305
10.6	1228	1.6	132.7	30000	**A553_132.7 S3 M3SA4**	300	**A553_132.7 P90 BN90LA4**	301
10.9	1199	1.3	129.7	20000	**A503_129.7 S3 M3SA4**	296	**A503_129.7 P90 BN90LA4**	297
11.4	1146	1.7	123.9	30000	**A553_123.9 S3 M3SA4**	300	**A553_123.9 P90 BN90LA4**	301
11.5	1138	2.5	123.0	30000	**A603_123.0 S3 M3SA4**	304	**A603_123.0 P90 BN90LA4**	305
12.0	1091	1.4	118.0	20000	**A503_118.0 S3 M3SA4**	296	**A503_118.0 P90 BN90LA4**	297
12.9	1012	1.5	109.4	20000	**A503_109.4 S3 M3SA4**	296	**A503_109.4 P90 BN90LA4**	297
13.1	997	2.8	107.8	30000	**A603_107.8 S3 M3SA4**	304	**A603_107.8 P90 BN90LA4**	305
13.9	938	2.1	101.4	30000	**A553_101.4 S3 M3SA4**	300	**A553_101.4 P90 BN90LA4**	301
14.2	921	1.6	99.5	20000	**A503_99.5 S3 M3SA4**	296	**A503_99.5 P90 BN90LA4**	297
14.2	920	3.0	99.5	30000	**A603_99.5 S3 M3SA4**	304	**A603_99.5 P90 BN90LA4**	305
15.2	858	0.9	92.8	15000	**A413_92.8 S3 M3SA4**	292	**A413_92.8 P90 BN90LA4**	293
15.7	828	1.8	89.5	20000	**A503_89.5 S3 M3SA4**	296	**A503_89.5 P90 BN90LA4**	297
16.3	799	3.5	86.4	30000	**A603_86.4 S3 M3SA4**	304	**A603_86.4 P90 BN90LA4**	305
17.3	753	2.0	81.5	20000	**A503_81.5 S3 M3SA4**	296	**A503_81.5 P90 BN90LA4**	297
17.7	736	2.7	79.5	30000	**A553_79.5 S3 M3SA4**	300	**A553_79.5 P90 BN90LA4**	301
17.8	757	1.1	79.2	15000	**A412_79.2 S3 M3SA4**	292	**A412_79.2 P90 BN90LA4**	293
19.8	681	1.2	71.3	15000	**A412_71.3 S3 M3SA4**	292	**A412_71.3 P90 BN90LA4**	293
20.1	650	2.3	70.2	20000	**A503_70.2 S3 M3SA4**	296	**A503_70.2 P90 BN90LA4**	297
21.4	629	1.0	65.8	11600	**A352_65.8 S3 M3SA4**	288	**A352_65.8 P90 BN90LA4**	289
21.9	595	3.4	64.3	30000	**A553_64.3 S3 M3SA4**	300	**A553_64.3 P90 BN90LA4**	301
22.0	613	1.4	64.2	15000	**A412_64.2 S3 M3SA4**	292	**A412_64.2 P90 BN90LA4**	293
22.1	591	2.5	63.9	20000	**A503_63.9 S3 M3SA4**	296	**A503_63.9 P90 BN90LA4**	297
23.4	577	1.0	60.4	11500	**A352_60.4 S3 M3SA4**	288	**A352_60.4 P90 BN90LA4**	289
24.0	562	1.5	58.8	15000	**A412_58.8 S3 M3SA4**	292	**A412_58.8 P90 BN90LA4**	293
24.8	526	2.9	56.8	20000	**A503_56.8 S3 M3SA4**	296	**A503_56.8 P90 BN90LA4**	297
26.0	519	1.2	54.3	11300	**A352_54.3 S3 M3SA4**	288	**A352_54.3 P90 BN90LA4**	289

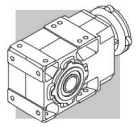

1.5 kW

n_2 min^{-1}	M_2 Nm	S	i	R_{n2} N	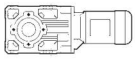			
26.5	508	1.7	53.1	15000	**A412_53.1 S3 M3SA4**	292	**A412_53.1 P90 BN90LA4**	293
27.3	478	3.1	51.7	19700	**A503_51.7 S3 M3SA4**	296	**A503_51.7 P90 BN90LA4**	297
28.7	469	1.3	49.1	11100	**A352_49.1 S3 M3SA4**	288	**A352_49.1 P90 BN90LA4**	289
29.2	461	1.8	48.3	14900	**A412_48.3 S3 M3SA4**	292	**A412_48.3 P90 BN90LA4**	293
31	438	1.4	45.8	11000	**A352_45.8 S3 M3SA4**	288	**A352_45.8 P90 BN90LA4**	289
31	431	1.9	45.1	14600	**A412_45.1 S3 M3SA4**	292	**A412_45.1 P90 BN90LA4**	293
32	415	1.0	43.4	6450	**A302_43.4 S3 M3SA4**	284	**A302_43.4 P90 BN90LA4**	285
34	399	1.5	41.8	10800	**A352_41.8 S3 M3SA4**	288	**A352_41.8 P90 BN90LA4**	289
36	375	1.1	39.3	6380	**A302_39.3 S3 M3SA4**	284	**A302_39.3 P90 BN90LA4**	285
38	350	1.2	36.6	6330	**A302_36.6 S3 M3SA4**	284	**A302_36.6 P90 BN90LA4**	285
38	350	1.7	36.6	10500	**A352_36.6 S3 M3SA4**	288	**A352_36.6 P90 BN90LA4**	289
39	343	2.3	35.9	13800	**A412_35.9 S3 M3SA4**	292	**A412_35.9 P90 BN90LA4**	293
42	319	1.3	33.4	6260	**A302_33.4 S3 M3SA4**	284	**A302_33.4 P90 BN90LA4**	285
43	317	1.9	33.2	10300	**A352_33.2 S3 M3SA4**	288	**A352_33.2 P90 BN90LA4**	289
48	280	1.5	29.3	6140	**A302_29.3 S3 M3SA4**	284	**A302_29.3 P90 BN90LA4**	285
50	272	2.2	28.4	9940	**A352_28.4 S3 M3SA4**	288	**A352_28.4 P90 BN90LA4**	289
50	271	2.7	28.3	13000	**A412_28.3 S3 M3SA4**	292	**A412_28.3 P90 BN90LA4**	293
53	254	1.6	26.5	6040	**A302_26.5 S3 M3SA4**	284	**A302_26.5 P90 BN90LA4**	285
53	253	1.0	26.5	3790	**A202_26.5 S3 M3SA4**	280	**A202_26.5 P90 BN90LA4**	281
55	245	2.4	25.7	9710	**A352_25.7 S3 M3SA4**	288	**A352_25.7 P90 BN90LA4**	289
61	221	1.1	23.1	3760	**A202_23.1 S3 M3SA4**	280	**A202_23.1 P90 BN90LA4**	281
62	217	1.9	22.8	5870	**A302_22.8 S3 M3SA4**	284	**A302_22.8 P90 BN90LA4**	285
62	217	3.1	22.7	12200	**A412_22.7 S3 M3SA4**	292	**A412_22.7 P90 BN90LA4**	293
63	215	2.8	22.5	9400	**A352_22.5 S3 M3SA4**	288	**A352_22.5 P90 BN90LA4**	289
66	203	1.2	21.2	3730	**A202_21.2 S3 M3SA4**	280	**A202_21.2 P90 BN90LA4**	281
69	196	2.1	20.5	5760	**A302_20.5 S3 M3SA4**	284	**A302_20.5 P90 BN90LA4**	285
69	195	3.1	20.4	9170	**A352_20.4 S3 M3SA4**	288	**A352_20.4 P90 BN90LA4**	289
78	173	1.4	18.1	3660	**A202_18.1 S3 M3SA4**	280	**A202_18.1 P90 BN90LA4**	281
78	172	2.3	18.0	5600	**A302_18.0 S3 M3SA4**	284	**A302_18.0 P90 BN90LA4**	285
86	157	1.0	16.4	3720	**A102_16.4 S3 M3SA4**	276	**A102_16.4 P90 BN90LA4**	277
86	156	2.5	16.3	5480	**A302_16.3 S3 M3SA4**	284	**A302_16.3 P90 BN90LA4**	285
87	154	1.6	16.2	3600	**A202_16.2 S3 M3SA4**	280	**A202_16.2 P90 BN90LA4**	281
100	134	1.8	14.1	3530	**A202_14.1 S3 M3SA4**	280	**A202_14.1 P90 BN90LA4**	281
101	133	1.1	13.9	3090	**A102_13.9 S3 M3SA4**	276	**A102_13.9 P90 BN90LA4**	277
104	130	2.9	13.6	5250	**A302_13.6 S3 M3SA4**	284	**A302_13.6 P90 BN90LA4**	285
115	118	1.2	12.3	3040	**A102_12.3 S3 M3SA4**	276	**A102_12.3 P90 BN90LA4**	277
118	114	1.8	12.0	3420	**A202_12.0 S3 M3SA4**	280	**A202_12.0 P90 BN90LA4**	281
120	113	2.7	11.8	5060	**A302_11.8 S3 M3SA4**	284	**A302_11.8 P90 BN90LA4**	285
123	109	3.2	22.8	5040	**A302_22.8 S2 M2SB2**	284	**A302_22.8 P90 BN90SA2**	285
134	101	1.5	10.6	2990	**A102_10.6 S3 M3SA4**	276	**A102_10.6 P90 BN90LA4**	277
135	100	3.4	10.5	4930	**A302_10.5 S3 M3SA4**	284	**A302_10.5 P90 BN90LA4**	285
136	99	2.3	10.3	3330	**A202_10.3 S3 M3SA4**	280	**A202_10.3 P90 BN90LA4**	281
147	92	1.5	9.6	2940	**A102_9.6 S3 M3SA4**	276	**A102_9.6 P90 BN90LA4**	277
150	90	2.3	9.4	3250	**A202_9.4 S3 M3SA4**	280	**A202_9.4 P90 BN90LA4**	281
151	89	3.4	9.3	4770	**A302_9.3 S3 M3SA4**	284	**A302_9.3 P90 BN90LA4**	285
166	81	1.7	8.5	3420	**A102_8.5 S3 M3SA4**	276	**A102_8.5 P90 BN90LA4**	277
168	80	2.6	8.4	3180	**A202_8.4 S3 M3SA4**	280	**A202_8.4 P90 BN90LA4**	281
193	70	3.0	7.3	3080	**A202_7.3 S3 M3SA4**	280	**A202_7.3 P90 BN90LA4**	281
196	69	2.0	7.2	2790	**A102_7.2 S3 M3SA4**	276	**A102_7.2 P90 BN90LA4**	277
216	62	3.4	6.5	3000	**A202_6.5 S3 M3SA4**	280	**A202_6.5 P90 BN90LA4**	281
223	61	2.3	6.3	3220	**A102_6.3 S3 M3SA4**	276	**A102_6.3 P90 BN90LA4**	277

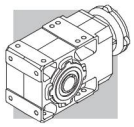

1.5 kW

n_2 min^{-1}	M_2 Nm	S	i	R_{n2} N			IEC	
258	52	2.7	5.5	2630	**A102_5.5 S3 M3SA4**	276	**A102_5.5 P90 BN90LA4**	277
291	46	3.0	9.6	2560	**A102_9.6 S2 M2SB2**	276	**A102_9.6 P90 BN90SA2**	277
329	41	3.4	8.5	2950	**A102_8.5 S2 M2SB2**	276	**A102_8.5 P90 BN90SA2**	277
388	35	2.4	7.2	1420	**A052_7.2 S2 M2SB2**	273		
442	30	2.6	6.3	1380	**A052_6.3 S2 M2SB2**	273		
512	26	2.9	5.5	1340	**A052_5.5 S2 M2SB2**	273		

2.2 kW

n_2 min^{-1}	M_2 Nm	S	i	R_{n2} N			IEC	
1.2	16217	0.9	1222	75000	**A904_1222 S3 M3LA4**	314	**A904_1222 P100 BN100LA4**	315
1.3	14736	1.0	1111	75000	**A904_1111 S3 M3LA4**	314	**A904_1111 P100 BN100LA4**	315
1.4	13602	1.0	1025	75000	**A904_1025 S3 M3LA4**	314	**A904_1025 P100 BN100LA4**	315
1.5	12435	1.1	937.2	75000	**A904_937.2 S3 M3LA4**	314	**A904_937.2 P100 BN100LA4**	315
1.6	11479	1.2	865.1	75000	**A904_865.1 S3 M3LA4**	314	**A904_865.1 P100 BN100LA4**	315
1.8	10176	1.4	766.9	75000	**A904_766.9 S3 M3LA4**	314	**A904_766.9 P100 BN100LA4**	315
2.0	9393	1.5	707.9	75000	**A904_707.9 S3 M3LA4**	314	**A904_707.9 P100 BN100LA4**	315
2.0	9334	0.9	703.5	65000	**A804_703.5 S3 M3LA4**	311	**A804_703.5 P100 BN100LA4**	312
2.3	8056	1.0	607.2	65000	**A804_607.2 S3 M3LA4**	311	**A804_607.2 P100 BN100LA4**	312
2.3	7982	1.8	601.6	75000	**A904_601.6 S3 M3LA4**	314	**A904_601.6 P100 BN100LA4**	315
2.5	7436	1.1	560.5	65000	**A804_560.5 S3 M3LA4**	311	**A804_560.5 P100 BN100LA4**	312
2.5	7368	1.9	555.3	75000	**A904_555.3 S3 M3LA4**	314	**A904_555.3 P100 BN100LA4**	315
2.9	6456	2.2	486.6	75000	**A904_486.6 S3 M3LA4**	314	**A904_486.6 P100 BN100LA4**	315
2.9	6355	1.3	478.9	65000	**A804_478.9 S3 M3LA4**	311	**A804_478.9 P100 BN100LA4**	312
3.1	5960	2.3	449.2	75000	**A904_449.2 S3 M3LA4**	314	**A904_449.2 P100 BN100LA4**	315
3.2	5866	1.4	442.1	65000	**A804_442.1 S3 M3LA4**	311	**A804_442.1 P100 BN100LA4**	312
3.5	5310	0.9	400.2	50000	**A704_400.2 S3 M3LA4**	308	**A704_400.2 P100 BN100LA4**	309
3.7	5114	2.7	385.4	75000	**A904_385.4 S3 M3LA4**	314	**A904_385.4 P100 BN100LA4**	315
3.7	5088	1.6	383.5	65000	**A804_383.5 S3 M3LA4**	311	**A804_383.5 P100 BN100LA4**	312
3.8	4901	1.0	369.4	50000	**A704_369.4 S3 M3LA4**	308	**A704_369.4 P100 BN100LA4**	309
4.0	4721	3.0	355.8	75000	**A904_355.8 S3 M3LA4**	314	**A904_355.8 P100 BN100LA4**	315
4.0	4697	1.7	354.0	65000	**A804_354.0 S3 M3LA4**	311	**A804_354.0 P100 BN100LA4**	312
4.5	4198	1.2	316.4	50000	**A704_316.4 S3 M3LA4**	308	**A704_316.4 P100 BN100LA4**	309
4.6	4045	3.5	304.9	75000	**A904_304.9 S3 M3LA4**	314	**A904_304.9 P100 BN100LA4**	315
4.7	3986	2.0	300.4	65000	**A804_300.4 S3 M3LA4**	311	**A804_300.4 P100 BN100LA4**	312
4.8	3875	1.3	292.0	50000	**A704_292.0 S3 M3LA4**	308	**A704_292.0 P100 BN100LA4**	309
5.1	3679	2.2	277.3	65000	**A804_277.3 S3 M3LA4**	311	**A804_277.3 P100 BN100LA4**	312
5.9	3166	1.6	238.6	50000	**A704_238.6 S3 M3LA4**	308	**A704_238.6 P100 BN100LA4**	309
6.1	3087	2.6	232.6	65000	**A804_232.6 S3 M3LA4**	311	**A804_232.6 P100 BN100LA4**	312
6.2	3000	0.9	226.1	30000	**A604_226.1 S3 M3LA4**	304	**A604_226.1 P100 BN100LA4**	305
6.4	2922	1.7	220.3	50000	**A704_220.3 S3 M3LA4**	308	**A704_220.3 P100 BN100LA4**	309
6.6	2849	2.8	214.7	65000	**A804_214.7 S3 M3LA4**	311	**A804_214.7 P100 BN100LA4**	312
6.8	2770	1.0	208.7	30000	**A604_208.7 S3 M3LA4**	304	**A604_208.7 P100 BN100LA4**	305
7.6	2520	1.1	185.8	30000	**A603_185.8 S3 M3LA4**	304	**A603_185.8 P100 BN100LA4**	305
7.7	2440	2.0	183.9	50000	**A704_183.9 S3 M3LA4**	308	**A704_183.9 P100 BN100LA4**	309
8.2	2326	1.2	171.5	30000	**A603_171.5 S3 M3LA4**	304	**A603_171.5 P100 BN100LA4**	305
8.2	2273	3.5	171.3	65000	**A804_171.3 S3 M3LA4**	311	**A804_171.3 P100 BN100LA4**	312
8.3	2252	2.2	169.8	50000	**A704_169.8 S3 M3LA4**	308	**A704_169.8 P100 BN100LA4**	309

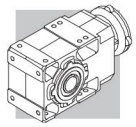

2.2 kW

n_2 min^{-1}	M_2 Nm	S	i	R_{n2} N	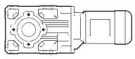		 IEC	
8.8	2177	0.9	160.4	30000	**A553_160.4 S3 M3LA4**	300	**A553_160.4 P100 BN100LA4**	301
9.0	2117	1.3	156.0	30000	**A603_156.0 S3 M3LA4**	304	**A603_156.0 P100 BN100LA4**	305
9.2	2085	1.9	153.7	50000	**A703_153.7 S3 M3LA4**	308	**A703_153.7 P100 BN100LA4**	309
9.6	1992	1.0	146.8	30000	**A553_146.8 S3 M3LA4**	300	**A553_146.8 P100 BN100LA4**	301
9.8	1954	1.4	144.0	30000	**A603_144.0 S3 M3LA4**	304	**A603_144.0 P100 BN100LA4**	305
9.9	1925	2.6	141.9	50000	**A703_141.9 S3 M3LA4**	308	**A703_141.9 P100 BN100LA4**	309
10.6	1808	1.5	133.3	30000	**A603_133.3 S3 M3LA4**	304	**A603_133.3 P100 BN100LA4**	305
10.6	1801	1.1	132.7	30000	**A553_132.7 S3 M3LA4**	300	**A553_132.7 P100 BN100LA4**	301
10.8	1773	2.8	130.7	50000	**A703_130.7 S3 M3LA4**	308	**A703_130.7 P100 BN100LA4**	309
11.4	1681	1.2	123.9	30000	**A553_123.9 S3 M3LA4**	300	**A553_123.9 P100 BN100LA4**	301
11.5	1669	1.7	123.0	30000	**A603_123.0 S3 M3LA4**	304	**A603_123.0 P100 BN100LA4**	305
11.7	1636	3.1	120.6	50000	**A703_120.6 S3 M3LA4**	308	**A703_120.6 P100 BN100LA4**	309
12.0	1600	0.9	118.0	20000	**A503_118.0 S3 M3LA4**	296	**A503_118.0 P100 BN100LA4**	297
12.9	1485	1.0	109.4	20000	**A503_109.4 S3 M3LA4**	296	**A503_109.4 P100 BN100LA4**	297
13.1	1463	1.9	107.8	30000	**A603_107.8 S3 M3LA4**	304	**A603_107.8 P100 BN100LA4**	305
13.5	1414	3.5	104.2	50000	**A703_104.2 S3 M3LA4**	308	**A703_104.2 P100 BN100LA4**	309
13.9	1375	1.5	101.4	30000	**A553_101.4 S3 M3LA4**	300	**A553_101.4 P100 BN100LA4**	301
14.2	1350	1.1	99.5	20000	**A503_99.5 S3 M3LA4**	296	**A503_99.5 P100 BN100LA4**	297
14.2	1350	2.1	99.5	30000	**A603_99.5 S3 M3LA4**	304	**A603_99.5 P100 BN100LA4**	305
15.7	1215	1.2	89.5	19800	**A503_89.5 S3 M3LA4**	296	**A503_89.5 P100 BN100LA4**	297
16.3	1172	2.4	86.4	30000	**A603_86.4 S3 M3LA4**	304	**A603_86.4 P100 BN100LA4**	305
17.3	1105	1.4	81.5	19600	**A503_81.5 S3 M3LA4**	296	**A503_81.5 P100 BN100LA4**	297
17.7	1082	2.6	79.7	30000	**A603_79.7 S3 M3LA4**	304	**A603_79.7 P100 BN100LA4**	305
17.7	1079	1.9	79.5	30000	**A553_79.5 S3 M3LA4**	300	**A553_79.5 P100 BN100LA4**	301
20.0	955	2.9	70.4	30000	**A603_70.4 S3 M3LA4**	304	**A603_70.4 P100 BN100LA4**	305
20.1	953	1.6	70.2	19300	**A503_70.2 S3 M3LA4**	296	**A503_70.2 P100 BN100LA4**	297
21.7	882	3.2	65.0	30000	**A603_65.0 S3 M3LA4**	304	**A603_65.0 P100 BN100LA4**	305
21.9	873	2.3	64.3	30000	**A553_64.3 S3 M3LA4**	300	**A553_64.3 P100 BN100LA4**	301
22.0	899	0.9	64.2	14500	**A412_64.2 S3 M3LA4**	292	**A412_64.2 P100 BN100LA4**	293
22.1	867	1.7	63.9	19000	**A503_63.9 S3 M3LA4**	296	**A503_63.9 P100 BN100LA4**	297
24.0	824	1.0	58.8	14400	**A412_58.8 S3 M3LA4**	292	**A412_58.8 P100 BN100LA4**	293
24.8	771	1.9	56.8	18600	**A503_56.8 S3 M3LA4**	296	**A503_56.8 P100 BN100LA4**	297
26.5	745	1.1	53.1	14100	**A412_53.1 S3 M3LA4**	292	**A412_53.1 P100 BN100LA4**	293
27.3	701	2.1	51.7	18300	**A503_51.7 S3 M3LA4**	296	**A503_51.7 P100 BN100LA4**	297
27.7	691	2.9	51.0	30000	**A553_51.0 S3 M3LA4**	300	**A553_51.0 P100 BN100LA4**	301
28.7	688	0.9	49.1	9900	**A352_49.1 S3 M3LA4**	288	**A352_49.1 P100 BN100LA4**	289
29.2	677	1.3	48.3	13900	**A412_48.3 S3 M3LA4**	292	**A412_48.3 P100 BN100LA4**	293
31	642	0.9	45.8	9840	**A352_45.8 S3 M3LA4**	288	**A352_45.8 P100 BN100LA4**	289
31	632	1.3	45.1	13700	**A412_45.1 S3 M3LA4**	292	**A412_45.1 P100 BN100LA4**	293
31	611	2.5	45.0	17900	**A503_45.0 S3 M3LA4**	296	**A503_45.0 P100 BN100LA4**	297
34	586	1.0	41.8	9750	**A352_41.8 S3 M3LA4**	288	**A352_41.8 P100 BN100LA4**	289
34	555	2.7	40.9	17500	**A503_40.9 S3 M3LA4**	296	**A503_40.9 P100 BN100LA4**	297
38	513	1.2	36.6	9600	**A352_36.6 S3 M3LA4**	288	**A352_36.6 P100 BN100LA4**	289
39	503	1.6	35.9	13100	**A412_35.9 S3 M3LA4**	292	**A412_35.9 P100 BN100LA4**	293
40	483	3.1	35.6	17000	**A503_35.6 S3 M3LA4**	296	**A503_35.6 P100 BN100LA4**	297
43	465	1.3	33.2	9460	**A352_33.2 S3 M3LA4**	288	**A352_33.2 P100 BN100LA4**	289
44	439	3.4	32.4	16600	**A503_32.4 S3 M3LA4**	296	**A503_32.4 P100 BN100LA4**	297
48	411	1.0	29.3	5380	**A302_29.3 S3 M3LA4**	284	**A302_29.3 P100 BN100LA4**	285
50	399	1.5	28.4	9230	**A352_28.4 S3 M3LA4**	288	**A352_28.4 P100 BN100LA4**	289
50	397	1.8	28.3	12400	**A412_28.3 S3 M3LA4**	292	**A412_28.3 P100 BN100LA4**	293
53	372	1.1	26.5	5350	**A302_26.5 S3 M3LA4**	284	**A302_26.5 P100 BN100LA4**	285

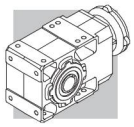

2.2 kW

n_2 min-1	M_2 Nm	S	i	R_{n2} N			IEC	
55	360	1.7	25.7	9070	**A352_25.7 S3 M3LA4**	288	**A352_25.7 P100 BN100LA4**	289
62	319	1.3	22.8	5290	**A302_22.8 S3 M3LA4**	284	**A302_22.8 P100 BN100LA4**	285
62	318	2.1	22.7	11700	**A412_22.7 S3 M3LA4**	292	**A412_22.7 P100 BN100LA4**	293
63	315	1.9	22.5	8840	**A352_22.5 S3 M3LA4**	288	**A352_22.5 P100 BN100LA4**	289
69	288	1.4	20.5	5230	**A302_20.5 S3 M3LA4**	284	**A302_20.5 P100 BN100LA4**	285
69	286	2.1	20.4	8660	**A352_20.4 S3 M3LA4**	288	**A352_20.4 P100 BN100LA4**	289
78	254	1.0	18.1	3140	**A202_18.1 S3 M3LA4**	280	**A202_18.1 P100 BN100LA4**	281
78	252	1.6	18.0	5140	**A302_18.0 S3 M3LA4**	284	**A302_18.0 P100 BN100LA4**	285
79	249	2.5	17.8	11000	**A412_17.8 S3 M3LA4**	292	**A412_17.8 P100 BN100LA4**	293
83	238	2.5	17.0	8320	**A352_17.0 S3 M3LA4**	288	**A352_17.0 P100 BN100LA4**	289
86	229	1.7	16.3	5060	**A302_16.3 S3 M3LA4**	284	**A302_16.3 P100 BN100LA4**	285
87	227	1.1	16.2	3140	**A202_16.2 S3 M3LA4**	280	**A202_16.2 P100 BN100LA4**	281
88	226	2.7	16.1	10800	**A412_16.1 S3 M3LA4**	292	**A412_16.1 P100 BN100LA4**	293
91	217	2.8	15.5	8150	**A352_15.5 S3 M3LA4**	288	**A352_15.5 P100 BN100LA4**	289
100	197	1.2	14.1	3120	**A202_14.1 S3 M3LA4**	280	**A202_14.1 P100 BN100LA4**	281
102	193	3.0	13.8	10300	**A412_13.8 S3 M3LA4**	292	**A412_13.8 P100 BN100LA4**	293
104	190	1.9	13.6	4900	**A302_13.6 S3 M3LA4**	284	**A302_13.6 P100 BN100LA4**	285
108	183	3.3	13.1	7820	**A352_13.1 S3 M3LA4**	288	**A352_13.1 P100 BN100LA4**	289
118	168	1.3	12.0	3070	**A202_12.0 S3 M3LA4**	280	**A202_12.0 P100 BN100LA4**	281
120	165	1.8	11.8	4750	**A302_11.8 S3 M3LA4**	284	**A302_11.8 P100 BN100LA4**	285
120	165	2.4	11.8	7710	**A352_11.8 S3 M3LA4**	288	**A352_11.8 P100 BN100LA4**	289
120	165	3.3	11.7	9870	**A412_11.7 S3 M3LA4**	292	**A412_11.7 P100 BN100LA4**	293
123	160	2.0	23.1	3070	**A202_23.1 S3 M3SA2**	280	**A202_23.1 P90 BN90L2**	281
133	149	2.7	10.6	7510	**A352_10.6 S3 M3LA4**	288	**A352_10.6 P100 BN100LA4**	289
134	148	1.0	10.6	2600	**A102_10.6 S3 M3LA4**	276	**A102_10.6 P100 BN100LA4**	277
135	147	2.3	10.5	4660	**A302_10.5 S3 M3LA4**	284	**A302_10.5 P100 BN100LA4**	285
136	145	1.6	10.3	3030	**A202_10.3 S3 M3LA4**	280	**A202_10.3 P100 BN100LA4**	281
147	135	1.0	9.6	2580	**A102_9.6 S3 M3LA4**	276	**A102_9.6 P100 BN100LA4**	277
150	131	1.6	9.4	2980	**A202_9.4 S3 M3LA4**	280	**A202_9.4 P100 BN100LA4**	281
151	130	2.3	9.3	4530	**A302_9.3 S3 M3LA4**	284	**A302_9.3 P100 BN100LA4**	285
151	130	3.1	9.3	7240	**A352_9.3 S3 M3LA4**	288	**A352_9.3 P100 BN100LA4**	289
166	119	1.2	8.5	3050	**A102_8.5 S3 M3LA4**	276	**A102_8.5 P100 BN100LA4**	277
167	119	2.5	8.5	4430	**A302_8.5 S3 M3LA4**	284	**A302_8.5 P100 BN100LA4**	285
167	119	3.2	8.5	7060	**A352_8.5 S3 M3LA4**	288	**A352_8.5 P100 BN100LA4**	289
168	117	1.8	8.4	2930	**A202_8.4 S3 M3LA4**	280	**A202_8.4 P100 BN100LA4**	281
193	102	2.1	7.3	2860	**A202_7.3 S3 M3LA4**	280	**A202_7.3 P100 BN100LA4**	281
196	101	1.4	7.2	2520	**A102_7.2 S3 M3LA4**	276	**A102_7.2 P100 BN100LA4**	277
201	98	3.0	7.0	4240	**A302_7.0 S3 M3LA4**	284	**A302_7.0 P100 BN100LA4**	285
216	92	2.3	6.5	2810	**A202_6.5 S3 M3LA4**	280	**A202_6.5 P100 BN100LA4**	281
220	90	3.3	6.4	4150	**A302_6.4 S3 M3LA4**	284	**A302_6.4 P100 BN100LA4**	285
223	89	1.6	6.3	2950	**A102_6.3 S3 M3LA4**	276	**A102_6.3 P100 BN100LA4**	277
258	77	1.8	5.5	2430	**A102_5.5 S3 M3LA4**	276	**A102_5.5 P100 BN100LA4**	277
263	75	2.8	5.4	2700	**A202_5.4 S3 M3LA4**	280	**A202_5.4 P100 BN100LA4**	281
304	65	3.2	9.4	2620	**A202_9.4 S3 M3SA2**	280	**A202_9.4 P90 BN90L2**	281

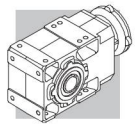

3.0 kW

n_2 min^{-1}	M_2 Nm	S	i	R_{n2} N	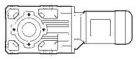		 IEC	
1.6	15653	0.9	865.1	75000	**A904_865.1 S3 M3LB4**	314	**A904_865.1 P100 BN100LB4**	315
1.8	13876	1.0	766.9	75000	**A904_766.9 S3 M3LB4**	314	**A904_766.9 P100 BN100LB4**	315
2.0	12809	1.1	707.9	75000	**A904_707.9 S3 M3LB4**	314	**A904_707.9 P100 BN100LB4**	315
2.3	10885	1.3	601.6	75000	**A904_601.6 S3 M3LB4**	314	**A904_601.6 P100 BN100LB4**	315
2.5	10047	1.4	555.3	75000	**A904_555.3 S3 M3LB4**	314	**A904_555.3 P100 BN100LB4**	315
2.9	8804	1.6	486.6	75000	**A904_486.6 S3 M3LB4**	314	**A904_486.6 P100 BN100LB4**	315
2.9	8665	0.9	478.9	65000	**A804_478.9 S3 M3LB4**	311	**A804_478.9 P100 BN100LB4**	312
3.1	8127	1.7	449.2	75000	**A904_449.2 S3 M3LB4**	314	**A904_449.2 P100 BN100LB4**	315
3.2	7999	1.0	442.1	65000	**A804_442.1 S3 M3LB4**	311	**A804_442.1 P100 BN100LB4**	312
3.7	6974	2.0	385.4	75000	**A904_385.4 S3 M3LB4**	314	**A904_385.4 P100 BN100LB4**	315
3.7	6938	1.2	383.5	65000	**A804_383.5 S3 M3LB4**	311	**A804_383.5 P100 BN100LB4**	312
4.0	6438	2.2	355.8	75000	**A904_355.8 S3 M3LB4**	314	**A904_355.8 P100 BN100LB4**	315
4.0	6405	1.2	354.0	65000	**A804_354.0 S3 M3LB4**	311	**A804_354.0 P100 BN100LB4**	312
4.5	5724	0.9	316.4	50000	**A704_316.4 S3 M3LB4**	308	**A704_316.4 P100 BN100LB4**	309
4.6	5517	2.5	304.9	75000	**A904_304.9 S3 M3LB4**	314	**A904_304.9 P100 BN100LB4**	315
4.7	5435	1.5	300.4	65000	**A804_300.4 S3 M3LB4**	311	**A804_300.4 P100 BN100LB4**	312
4.8	5284	0.9	292.0	50000	**A704_292.0 S3 M3LB4**	308	**A704_292.0 P100 BN100LB4**	309
5.0	5092	2.7	281.4	75000	**A904_281.4 S3 M3LB4**	314	**A904_281.4 P100 BN100LB4**	315
5.1	5017	1.6	277.3	65000	**A804_277.3 S3 M3LB4**	311	**A804_277.3 P100 BN100LB4**	312
5.9	4317	1.2	238.6	50000	**A704_238.6 S3 M3LB4**	308	**A704_238.6 P100 BN100LB4**	309
6.1	4209	1.9	232.6	65000	**A804_232.6 S3 M3LB4**	311	**A804_232.6 P100 BN100LB4**	312
6.2	4097	3.4	226.4	75000	**A904_226.4 S3 M3LB4**	314	**A904_226.4 P100 BN100LB4**	315
6.4	3985	1.3	220.3	50000	**A704_220.3 S3 M3LB4**	308	**A704_220.3 P100 BN100LB4**	309
6.6	3885	2.1	214.7	65000	**A804_214.7 S3 M3LB4**	311	**A804_214.7 P100 BN100LB4**	312
7.7	3327	1.5	183.9	50000	**A704_183.9 S3 M3LB4**	308	**A704_183.9 P100 BN100LB4**	309
8.2	3172	0.9	171.5	30000	**A603_171.5 S3 M3LB4**	304	**A603_171.5 P100 BN100LB4**	305
8.2	3099	2.6	171.3	65000	**A804_171.3 S3 M3LB4**	311	**A804_171.3 P100 BN100LB4**	312
8.3	3071	1.6	169.8	50000	**A704_169.8 S3 M3LB4**	308	**A704_169.8 P100 BN100LB4**	309
9.0	2901	2.8	156.8	65000	**A803_156.8 S3 M3LB4**	311	**A803_156.8 P100 BN100LB4**	312
9.0	2887	1.0	156.0	30000	**A603_156.0 S3 M3LB4**	304	**A603_156.0 P100 BN100LB4**	305
9.2	2843	1.4	153.7	50000	**A703_153.7 S3 M3LB4**	308	**A703_153.7 P100 BN100LB4**	309
9.7	2678	3.0	144.7	65000	**A803_144.7 S3 M3LB4**	311	**A803_144.7 P100 BN100LB4**	312
9.8	2665	1.1	144.0	30000	**A603_144.0 S3 M3LB4**	304	**A603_144.0 P100 BN100LB4**	305
9.9	2624	1.9	141.9	50000	**A703_141.9 S3 M3LB4**	308	**A703_141.9 P100 BN100LB4**	309
10.6	2466	1.1	133.3	30000	**A603_133.3 S3 M3LB4**	304	**A603_133.3 P100 BN100LB4**	305
10.8	2417	2.1	130.7	50000	**A703_130.7 S3 M3LB4**	308	**A703_130.7 P100 BN100LB4**	309
11.2	2324	3.4	125.6	65000	**A803_125.6 S3 M3LB4**	311	**A803_125.6 P100 BN100LB4**	312
11.5	2276	1.2	123.0	30000	**A603_123.0 S3 M3LB4**	304	**A603_123.0 P100 BN100LB4**	305
11.7	2231	2.2	120.6	50000	**A703_120.6 S3 M3LB4**	308	**A703_120.6 P100 BN100LB4**	309
13.1	1994	1.4	107.8	30000	**A603_107.8 S3 M3LB4**	304	**A603_107.8 P100 BN100LB4**	305
13.5	1928	2.6	104.2	50000	**A703_104.2 S3 M3LB4**	308	**A703_104.2 P100 BN100LB4**	309
13.9	1876	1.1	101.4	30000	**A553_101.4 S3 M3LB4**	300	**A553_101.4 P100 BN100LB4**	301
14.2	1841	1.5	99.5	30000	**A603_99.5 S3 M3LB4**	304	**A603_99.5 P100 BN100LB4**	305
14.7	1780	2.8	96.2	50000	**A703_96.2 S3 M3LB4**	308	**A703_96.2 P100 BN100LB4**	309
15.7	1657	0.9	89.5	17100	**A503_89.5 S3 M3LB4**	296	**A503_89.5 P100 BN100LB4**	297
16.3	1598	1.8	86.4	30000	**A603_86.4 S3 M3LB4**	304	**A603_86.4 P100 BN100LB4**	305
16.4	1590	3.1	85.9	50000	**A703_85.9 S3 M3LB4**	308	**A703_85.9 P100 BN100LB4**	309
17.3	1507	1.0	81.5	17200	**A503_81.5 S3 M3LB4**	296	**A503_81.5 P100 BN100LB4**	297
17.7	1475	1.9	79.7	30000	**A603_79.7 S3 M3LB4**	304	**A603_79.7 P100 BN100LB4**	305
17.7	1471	1.4	79.5	30000	**A553_79.5 S3 M3LB4**	300	**A553_79.5 P100 BN100LB4**	301
17.8	1468	3.4	79.3	50000	**A703_79.3 S3 M3LB4**	308	**A703_79.3 P100 BN100LB4**	309

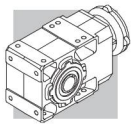

3.0 kW

n_2 min^{-1}	M_2 Nm	S	i	R_{n2} N	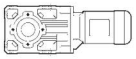		 IEC	
20.0	1303	2.1	70.4	30000	**A603_70.4 S3 M3LB4**	304	**A603_70.4 P100 BN100LB4**	305
20.1	1299	1.2	70.2	17200	**A503_70.2 S3 M3LB4**	296	**A503_70.2 P100 BN100LB4**	297
21.7	1202	2.3	65.0	30000	**A603_65.0 S3 M3LB4**	304	**A603_65.0 P100 BN100LB4**	305
21.9	1190	1.7	64.3	30000	**A553_64.3 S3 M3LB4**	300	**A553_64.3 P100 BN100LB4**	301
22.1	1182	1.3	63.9	17100	**A503_63.9 S3 M3LB4**	296	**A503_63.9 P100 BN100LB4**	297
24.8	1051	1.4	56.8	17000	**A503_56.8 S3 M3LB4**	296	**A503_56.8 P100 BN100LB4**	297
25.4	1029	2.7	55.6	30000	**A603_55.6 S3 M3LB4**	304	**A603_55.6 P100 BN100LB4**	305
27.3	956	1.6	51.7	16800	**A503_51.7 S3 M3LB4**	296	**A503_51.7 P100 BN100LB4**	297
27.5	950	2.9	51.3	30000	**A603_51.3 S3 M3LB4**	304	**A603_51.3 P100 BN100LB4**	305
27.7	943	2.1	51.0	30000	**A553_51.0 S3 M3LB4**	300	**A553_51.0 P100 BN100LB4**	301
29.2	923	0.9	48.3	12700	**A412_48.3 S3 M3LB4**	292	**A412_48.3 P100 BN100LB4**	293
31	861	1.0	45.1	12600	**A412_45.1 S3 M3LB4**	292	**A412_45.1 P100 BN100LB4**	293
31	836	3.3	45.2	30000	**A603_45.2 S3 M3LB4**	304	**A603_45.2 P100 BN100LB4**	305
31	833	1.8	45.0	16500	**A503_45.0 S3 M3LB4**	296	**A503_45.0 P100 BN100LB4**	297
34	757	2.0	40.9	16300	**A503_40.9 S3 M3LB4**	296	**A503_40.9 P100 BN100LB4**	297
35	746	2.7	40.3	30000	**A553_40.3 S3 M3LB4**	300	**A553_40.3 P100 BN100LB4**	301
38	700	0.9	36.6	8550	**A352_36.6 S3 M3LB4**	288	**A352_36.6 P100 BN100LB4**	289
39	686	1.1	35.9	12200	**A412_35.9 S3 M3LB4**	292	**A412_35.9 P100 BN100LB4**	293
40	659	2.3	35.6	16000	**A503_35.6 S3 M3LB4**	296	**A503_35.6 P100 BN100LB4**	297
43	634	0.9	33.2	8520	**A352_33.2 S3 M3LB4**	288	**A352_33.2 P100 BN100LB4**	289
44	599	2.5	32.4	15700	**A503_32.4 S3 M3LB4**	296	**A503_32.4 P100 BN100LB4**	297
50	543	1.1	28.4	8420	**A352_28.4 S3 M3LB4**	288	**A352_28.4 P100 BN100LB4**	289
50	541	1.3	28.3	11700	**A412_28.3 S3 M3LB4**	292	**A412_28.3 P100 BN100LB4**	293
53	489	3.1	26.4	15100	**A503_26.4 S3 M3LB4**	296	**A503_26.4 P100 BN100LB4**	297
55	491	1.2	25.7	8330	**A352_25.7 S3 M3LB4**	288	**A352_25.7 P100 BN100LB4**	289
59	445	3.4	24.0	14800	**A503_24.0 S3 M3LB4**	296	**A503_24.0 P100 BN100LB4**	297
62	435	0.9	22.8	4610	**A302_22.8 S3 M3LB4**	284	**A302_22.8 P100 BN100LB4**	285
62	433	1.6	22.7	11200	**A412_22.7 S3 M3LB4**	292	**A412_22.7 P100 BN100LB4**	293
63	430	1.4	22.5	8190	**A352_22.5 S3 M3LB4**	288	**A352_22.5 P100 BN100LB4**	289
67	400	3.0	20.9	15500	**A502_20.9 S3 M3LB4**	296	**A502_20.9 P100 BN100LB4**	297
69	392	1.0	20.5	4620	**A302_20.5 S3 M3LB4**	284	**A302_20.5 P100 BN100LB4**	285
69	390	1.5	20.4	8080	**A352_20.4 S3 M3LB4**	288	**A352_20.4 P100 BN100LB4**	289
78	344	1.2	18.0	4600	**A302_18.0 S3 M3LB4**	284	**A302_18.0 P100 BN100LB4**	285
79	339	1.9	17.8	10600	**A412_17.8 S3 M3LB4**	292	**A412_17.8 P100 BN100LB4**	293
83	324	1.9	17.0	7830	**A352_17.0 S3 M3LB4**	288	**A352_17.0 P100 BN100LB4**	289
86	312	1.2	16.3	4580	**A302_16.3 S3 M3LB4**	284	**A302_16.3 P100 BN100LB4**	285
88	308	2.0	16.1	10400	**A412_16.1 S3 M3LB4**	292	**A412_16.1 P100 BN100LB4**	293
91	296	2.0	15.5	7700	**A352_15.5 S3 M3LB4**	288	**A352_15.5 P100 BN100LB4**	289
100	269	0.9	14.1	2650	**A202_14.1 S3 M3LB4**	280	**A202_14.1 P100 BN100LB4**	281
102	263	2.2	13.8	9990	**A412_13.8 S3 M3LB4**	292	**A412_13.8 P100 BN100LB4**	293
104	259	1.4	13.6	4500	**A302_13.6 S3 M3LB4**	284	**A302_13.6 P100 BN100LB4**	285
108	250	2.4	13.1	7450	**A352_13.1 S3 M3LB4**	288	**A352_13.1 P100 BN100LB4**	289
118	229	0.9	12.0	2670	**A202_12.0 S3 M3LB4**	280	**A202_12.0 P100 BN100LB4**	281
120	225	1.3	11.8	4400	**A302_11.8 S3 M3LB4**	284	**A302_11.8 P100 BN100LB4**	285
120	225	1.8	11.8	7410	**A352_11.8 S3 M3LB4**	288	**A352_11.8 P100 BN100LB4**	289
120	224	2.5	11.7	9580	**A412_11.7 S3 M3LB4**	292	**A412_11.7 P100 BN100LB4**	293
124	218	1.5	23.1	2690	**A202_23.1 S3 M3LA2**	280	**A202_23.1 P100 BN100L2**	281
133	203	2.0	10.6	7230	**A352_10.6 S3 M3LB4**	288	**A352_10.6 P100 BN100LB4**	289
135	200	1.7	10.5	4350	**A302_10.5 S3 M3LB4**	284	**A302_10.5 P100 BN100LB4**	285
136	198	1.1	10.3	2690	**A202_10.3 S3 M3LB4**	280	**A202_10.3 P100 BN100LB4**	281
139	194	2.8	10.1	9230	**A412_10.1 S3 M3LB4**	292	**A412_10.1 P100 BN100LB4**	293

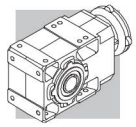

3.0 kW

n_2 min^{-1}	M_2 Nm	S	i	R_{n2} N	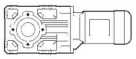		 IEC	
150	179	1.2	9.4	2670	**A202_9.4 S3 M3LB4**	280	**A202_9.4 P100 BN100LB4**	281
151	178	1.7	9.3	4240	**A302_9.3 S3 M3LB4**	284	**A302_9.3 P100 BN100LB4**	285
151	178	2.2	9.3	7000	**A352_9.3 S3 M3LB4**	288	**A352_9.3 P100 BN100LB4**	289
153	176	3.1	9.2	8980	**A412_9.2 S3 M3LB4**	292	**A412_9.2 P100 BN100LB4**	293
167	162	1.9	8.5	4170	**A302_8.5 S3 M3LB4**	284	**A302_8.5 P100 BN100LB4**	285
167	162	2.4	8.5	6840	**A352_8.5 S3 M3LB4**	288	**A352_8.5 P100 BN100LB4**	289
168	160	1.3	8.4	2650	**A202_8.4 S3 M3LB4**	280	**A202_8.4 P100 BN100LB4**	281
169	159	3.5	8.3	8740	**A412_8.3 S3 M3LB4**	292	**A412_8.3 P100 BN100LB4**	293
193	139	1.5	7.3	2620	**A202_7.3 S3 M3LB4**	280	**A202_7.3 P100 BN100LB4**	281
196	138	1.0	7.2	2220	**A102_7.2 S3 M3LB4**	276	**A102_7.2 P100 BN100LB4**	277
201	134	2.2	7.0	4030	**A302_7.0 S3 M3LB4**	284	**A302_7.0 P100 BN100LB4**	285
201	134	2.8	7.0	6520	**A352_7.0 S3 M3LB4**	288	**A352_7.0 P100 BN100LB4**	289
216	125	1.7	6.5	2590	**A202_6.5 S3 M3LB4**	280	**A202_6.5 P100 BN100LB4**	281
220	123	2.4	6.4	3950	**A302_6.4 S3 M3LB4**	284	**A302_6.4 P100 BN100LB4**	285
220	123	2.9	6.4	6360	**A352_6.4 S3 M3LB4**	288	**A352_6.4 P100 BN100LB4**	289
223	121	1.2	6.3	2640	**A102_6.3 S3 M3LB4**	276	**A102_6.3 P100 BN100LB4**	277
243	111	2.7	11.8	3870	**A302_11.8 S3 M3LA2**	284	**A302_11.8 P100 BN100L2**	285
258	104	1.3	5.5	2200	**A102_5.5 S3 M3LB4**	276	**A102_5.5 P100 BN100LB4**	277
260	103	2.9	5.4	3810	**A302_5.4 S3 M3LB4**	284	**A302_5.4 P100 BN100LB4**	285
260	103	3.3	5.4	6070	**A352_5.4 S3 M3LB4**	288	**A352_5.4 P100 BN100LB4**	289
263	102	2.1	5.4	2520	**A202_5.4 S3 M3LB4**	280	**A202_5.4 P100 BN100LB4**	281
277	97	1.9	10.3	2500	**A202_10.3 S3 M3LA2**	280	**A202_10.3 P100 BN100L2**	281
307	88	3.4	9.3	3670	**A302_9.3 S3 M3LA2**	284	**A302_9.3 P100 BN100L2**	285
342	79	2.7	8.4	2410	**A202_8.4 S3 M3LA2**	280	**A202_8.4 P100 BN100L2**	281
397	68	2.1	7.2	2090	**A102_7.2 S3 M3LA2**	276	**A102_7.2 P100 BN100L2**	277
451	60	2.3	6.3	2430	**A102_6.3 S3 M3LA2**	276	**A102_6.3 P100 BN100L2**	277
523	51	2.6	5.5	1990	**A102_5.5 S3 M3LA2**	276	**A102_5.5 P100 BN100L2**	277

4.0 kW

n_2 min^{-1}	M_2 Nm	S	i	R_{n2} N	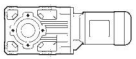		 IEC	
2.3	14616	1.0	601.6	75000	**A904_601.6 S3 M3LC4**	314	**A904_601.6 P112 BN112M4**	315
2.5	13492	1.0	555.3	75000	**A904_555.3 S3 M3LC4**	314	**A904_555.3 P112 BN112M4**	315
2.9	11823	1.2	486.6	75000	**A904_486.6 S3 M3LC4**	314	**A904_486.6 P112 BN112M4**	315
3.1	10913	1.3	449.2	75000	**A904_449.2 S3 M3LC4**	314	**A904_449.2 P112 BN112M4**	315
3.6	9365	1.5	385.4	75000	**A904_385.4 S3 M3LC4**	314	**A904_385.4 P112 BN112M4**	315
3.7	9317	0.9	383.5	65000	**A804_383.5 S3 M3LC4**	311	**A804_383.5 P112 BN112M4**	312
3.9	8645	1.6	355.8	75000	**A904_355.8 S3 M3LC4**	314	**A904_355.8 P112 BN112M4**	315
4.0	8600	0.9	354.0	65000	**A804_354.0 S3 M3LC4**	311	**A804_354.0 P112 BN112M4**	312
4.6	7408	1.9	304.9	75000	**A904_304.9 S3 M3LC4**	314	**A904_304.9 P112 BN112M4**	315
4.7	7299	1.1	300.4	65000	**A804_300.4 S3 M3LC4**	311	**A804_300.4 P112 BN112M4**	312
5.0	6838	2.0	281.4	75000	**A904_281.4 S3 M3LC4**	314	**A904_281.4 P112 BN112M4**	315
5.0	6737	1.2	277.3	65000	**A804_277.3 S3 M3LC4**	311	**A804_277.3 P112 BN112M4**	312
5.9	5797	0.9	238.6	50000	**A704_238.6 S3 M3LC4**	308	**A704_238.6 P112 BN112M4**	309
6.0	5652	1.4	232.6	65000	**A804_232.6 S3 M3LC4**	311	**A804_232.6 P112 BN112M4**	312
6.2	5502	2.5	226.4	75000	**A904_226.4 S3 M3LC4**	314	**A904_226.4 P112 BN112M4**	315
6.4	5352	0.9	220.3	50000	**A704_220.3 S3 M3LC4**	308	**A704_220.3 P112 BN112M4**	309
6.5	5217	1.5	214.7	65000	**A804_214.7 S3 M3LC4**	311	**A804_214.7 P112 BN112M4**	312

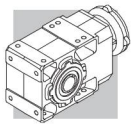

4.0 kW

n_2 min^{-1}	M_2 Nm	S	i	R_{n2} N	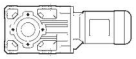		 IEC	
6.7	5078	2.8	209.0	75000	**A904_209.0 S3 M3LC4**	314	**A904_209.0 P112 BN112M4**	315
7.6	4468	1.1	183.9	50000	**A704_183.9 S3 M3LC4**	308	**A704_183.9 P112 BN112M4**	309
7.8	4373	3.2	180.0	75000	**A904_180.0 S3 M3LC4**	314	**A904_180.0 P112 BN112M4**	315
8.2	4162	1.9	171.3	65000	**A804_171.3 S3 M3LC4**	311	**A804_171.3 P112 BN112M4**	312
8.2	4125	1.2	169.8	50000	**A704_169.8 S3 M3LC4**	308	**A704_169.8 P112 BN112M4**	309
8.4	4036	3.5	166.1	75000	**A904_166.1 S3 M3LC4**	314	**A904_166.1 P112 BN112M4**	315
8.9	3895	2.1	156.8	65000	**A803_156.8 S3 M3LC4**	311	**A803_156.8 P112 BN112M4**	312
9.1	3818	1.1	153.7	50000	**A703_153.7 S3 M3LC4**	308	**A703_153.7 P112 BN112M4**	309
9.7	3596	2.2	144.7	65000	**A803_144.7 S3 M3LC4**	311	**A803_144.7 P112 BN112M4**	312
9.9	3524	1.4	141.9	50000	**A703_141.9 S3 M3LC4**	308	**A703_141.9 P112 BN112M4**	309
10.7	3246	1.5	130.7	50000	**A703_130.7 S3 M3LC4**	308	**A703_130.7 P112 BN112M4**	309
11.1	3121	2.6	125.6	65000	**A803_125.6 S3 M3LC4**	311	**A803_125.6 P112 BN112M4**	312
11.4	3056	0.9	123.0	30000	**A603_123.0 S3 M3LC4**	304	**A603_123.0 P112 BN112M4**	305
11.6	2996	1.7	120.6	50000	**A703_120.6 S3 M3LC4**	308	**A703_120.6 P112 BN112M4**	309
12.1	2881	2.8	116.0	65000	**A803_116.0 S3 M3LC4**	311	**A803_116.0 P112 BN112M4**	312
13.0	2678	1.0	107.8	30000	**A603_107.8 S3 M3LC4**	304	**A603_107.8 P112 BN112M4**	305
13.4	2590	1.9	104.2	50000	**A703_104.2 S3 M3LC4**	308	**A703_104.2 P112 BN112M4**	309
13.5	2584	3.1	104.0	65000	**A803_104.0 S3 M3LC4**	311	**A803_104.0 P112 BN112M4**	312
14.1	2472	1.1	99.5	30000	**A603_99.5 S3 M3LC4**	304	**A603_99.5 P112 BN112M4**	305
14.6	2390	2.1	96.2	50000	**A703_96.2 S3 M3LC4**	308	**A703_96.2 P112 BN112M4**	309
14.6	2386	3.4	96.0	65000	**A803_96.0 S3 M3LC4**	311	**A803_96.0 P112 BN112M4**	312
16.2	2146	1.3	86.4	30000	**A603_86.4 S3 M3LC4**	304	**A603_86.4 P112 BN112M4**	305
16.3	2135	2.3	85.9	50000	**A703_85.9 S3 M3LC4**	308	**A703_85.9 P112 BN112M4**	309
17.6	1980	1.4	79.7	30000	**A603_79.7 S3 M3LC4**	304	**A603_79.7 P112 BN112M4**	305
17.6	1976	1.0	79.5	30000	**A553_79.5 S3 M3LC4**	300	**A553_79.5 P112 BN112M4**	301
17.6	1971	2.5	79.3	50000	**A703_79.3 S3 M3LC4**	308	**A703_79.3 P112 BN112M4**	309
19.3	1802	2.8	72.5	50000	**A703_72.5 S3 M3LC4**	308	**A703_72.5 P112 BN112M4**	309
19.9	1749	1.6	70.4	30000	**A603_70.4 S3 M3LC4**	304	**A603_70.4 P112 BN112M4**	305
20.9	1663	3.0	66.9	50000	**A703_66.9 S3 M3LC4**	308	**A703_66.9 P112 BN112M4**	309
21.5	1615	1.7	65.0	30000	**A603_65.0 S3 M3LC4**	304	**A603_65.0 P112 BN112M4**	305
21.8	1598	1.3	64.3	30000	**A553_64.3 S3 M3LC4**	300	**A553_64.3 P112 BN112M4**	301
21.9	1587	0.9	63.9	14700	**A503_63.9 S3 M3LC4**	296	**A503_63.9 P112 BN112M4**	297
24.6	1411	1.1	56.8	14800	**A503_56.8 S3 M3LC4**	296	**A503_56.8 P112 BN112M4**	297
25.2	1381	2.0	55.6	30000	**A603_55.6 S3 M3LC4**	304	**A603_55.6 P112 BN112M4**	305
27.1	1284	1.2	51.7	14900	**A503_51.7 S3 M3LC4**	296	**A503_51.7 P112 BN112M4**	297
27.3	1275	2.2	51.3	30000	**A603_51.3 S3 M3LC4**	304	**A603_51.3 P112 BN112M4**	305
28	1266	1.6	51.0	30000	**A553_51.0 S3 M3LC4**	300	**A553_51.0 P112 BN112M4**	301
31	1123	2.5	45.2	30000	**A603_45.2 S3 M3LC4**	304	**A603_45.2 P112 BN112M4**	305
31	1118	1.3	45.0	14900	**A503_45.0 S3 M3LC4**	296	**A503_45.0 P112 BN112M4**	297
34	1036	2.7	41.7	30000	**A603_41.7 S3 M3LC4**	304	**A603_41.7 P112 BN112M4**	305
34	1017	1.5	40.9	14800	**A503_40.9 S3 M3LC4**	296	**A503_40.9 P112 BN112M4**	297
35	1001	2.0	40.3	30000	**A553_40.3 S3 M3LC4**	300	**A553_40.3 P112 BN112M4**	301
39	884	1.7	35.6	14700	**A503_35.6 S3 M3LC4**	296	**A503_35.6 P112 BN112M4**	297
41	852	3.3	34.3	30000	**A603_34.3 S3 M3LC4**	304	**A603_34.3 P112 BN112M4**	305
43	804	1.9	32.4	14500	**A503_32.4 S3 M3LC4**	296	**A503_32.4 P112 BN112M4**	297
47	744	2.7	29.9	30000	**A553_29.9 S3 M3LC4**	300	**A553_29.9 P112 BN112M4**	301
49	727	1.0	28.3	10900	**A412_28.3 S3 M3LC4**	292	**A412_28.3 P112 BN112M4**	293
53	657	2.3	26.4	14100	**A503_26.4 S3 M3LC4**	296	**A503_26.4 P112 BN112M4**	297
55	659	0.9	25.7	7420	**A352_25.7 S3 M3LC4**	288	**A352_25.7 P112 BN112M4**	289
58	597	2.5	24.0	13900	**A503_24.0 S3 M3LC4**	296	**A503_24.0 P112 BN112M4**	297
59	591	3.3	23.8	30000	**A553_23.8 S3 M3LC4**	300	**A553_23.8 P112 BN112M4**	301

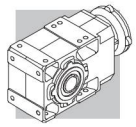

4.0 kW

n_2 min^{-1}	M_2 Nm	S	i	R_{n2} N	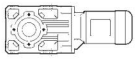		 IEC	
62	582	1.2	22.7	10500	**A412_22.7 S3 M3LC4**	292	**A412_22.7 P112 BN112M4**	293
62	577	1.0	22.5	7400	**A352_22.5 S3 M3LC4**	288	**A352_22.5 P112 BN112M4**	289
67	537	2.2	20.9	15100	**A502_20.9 S3 M3LC4**	296	**A502_20.9 P112 BN112M4**	297
69	524	1.1	20.4	7360	**A352_20.4 S3 M3LC4**	288	**A352_20.4 P112 BN112M4**	289
78	462	0.9	18.0	3930	**A302_18.0 S3 M3LC4**	284	**A302_18.0 P112 BN112M4**	285
79	456	1.4	17.8	10100	**A412_17.8 S3 M3LC4**	292	**A412_17.8 P112 BN112M4**	293
83	435	1.4	17.0	7240	**A352_17.0 S3 M3LC4**	288	**A352_17.0 P112 BN112M4**	289
84	425	2.8	16.6	14200	**A502_16.6 S3 M3LC4**	296	**A502_16.6 P112 BN112M4**	297
86	419	0.9	16.3	3970	**A302_16.3 S3 M3LC4**	284	**A302_16.3 P112 BN112M4**	285
87	413	1.5	16.1	9940	**A412_16.1 S3 M3LC4**	292	**A412_16.1 P112 BN112M4**	293
90	397	1.5	15.5	7160	**A352_15.5 S3 M3LC4**	288	**A352_15.5 P112 BN112M4**	289
102	353	1.7	13.8	9610	**A412_13.8 S3 M3LC4**	292	**A412_13.8 P112 BN112M4**	293
103	348	1.1	13.6	4000	**A302_13.6 S3 M3LC4**	284	**A302_13.6 P112 BN112M4**	285
107	336	3.3	13.1	13300	**A502_13.1 S3 M3LC4**	296	**A502_13.1 P112 BN112M4**	297
107	335	1.8	13.1	7000	**A352_13.1 S3 M3LC4**	288	**A352_13.1 P112 BN112M4**	289
119	302	1.0	11.8	3960	**A302_11.8 S3 M3LC4**	284	**A302_11.8 P112 BN112M4**	285
119	302	1.3	11.8	7050	**A352_11.8 S3 M3LC4**	288	**A352_11.8 P112 BN112M4**	289
119	301	1.8	11.7	9260	**A412_11.7 S3 M3LC4**	292	**A412_11.7 P112 BN112M4**	293
126	285	1.2	22.8	3980	**A302_22.8 S3 M3LB2**	284	**A302_22.8 P112 BN112M2**	285
132	273	1.5	10.6	6910	**A352_10.6 S3 M3LC4**	288	**A352_10.6 P112 BN112M4**	289
134	268	1.3	10.5	3970	**A302_10.5 S3 M3LC4**	284	**A302_10.5 P112 BN112M4**	285
138	260	2.1	10.1	8960	**A412_10.1 S3 M3LC4**	292	**A412_10.1 P112 BN112M4**	293
150	239	1.3	9.3	3900	**A302_9.3 S3 M3LC4**	284	**A302_9.3 P112 BN112M4**	285
150	239	1.7	9.3	6730	**A352_9.3 S3 M3LC4**	288	**A352_9.3 P112 BN112M4**	289
152	236	2.3	9.2	8740	**A412_9.2 S3 M3LC4**	292	**A412_9.2 P112 BN112M4**	293
165	217	1.4	8.5	3860	**A302_8.5 S3 M3LC4**	284	**A302_8.5 P112 BN112M4**	285
165	217	1.8	8.5	6590	**A352_8.5 S3 M3LC4**	288	**A352_8.5 P112 BN112M4**	289
167	215	1.0	8.4	2300	**A202_8.4 S3 M3LC4**	280	**A202_8.4 P112 BN112M4**	281
168	214	2.6	8.3	8520	**A412_8.3 S3 M3LC4**	292	**A412_8.3 P112 BN112M4**	293
192	187	1.1	7.3	2310	**A202_7.3 S3 M3LC4**	280	**A202_7.3 P112 BN112M4**	281
197	183	3.0	7.1	8180	**A412_7.1 S3 M3LC4**	292	**A412_7.1 P112 BN112M4**	293
199	180	1.7	7.0	3770	**A302_7.0 S3 M3LC4**	284	**A302_7.0 P112 BN112M4**	285
199	180	2.1	7.0	6310	**A352_7.0 S3 M3LC4**	288	**A352_7.0 P112 BN112M4**	289
214	168	1.3	6.5	2310	**A202_6.5 S3 M3LC4**	280	**A202_6.5 P112 BN112M4**	281
218	165	1.8	6.4	3720	**A302_6.4 S3 M3LC4**	284	**A302_6.4 P112 BN112M4**	285
218	165	2.1	6.4	6180	**A352_6.4 S3 M3LC4**	288	**A352_6.4 P112 BN112M4**	289
256	140	1.0	5.5	1910	**A102_5.5 S3 M3LC4**	276	**A102_5.5 P112 BN112M4**	277
259	139	2.2	5.4	3610	**A302_5.4 S3 M3LC4**	284	**A302_5.4 P112 BN112M4**	285
259	139	2.4	5.4	5920	**A352_5.4 S3 M3LC4**	288	**A352_5.4 P112 BN112M4**	289
262	137	1.5	5.4	2300	**A202_5.4 S3 M3LC4**	280	**A202_5.4 P112 BN112M4**	281
270	133	3.0	10.6	5850	**A352_10.6 S3 M3LB2**	288	**A352_10.6 P112 BN112M2**	289
308	117	3.4	9.3	5650	**A352_9.3 S3 M3LB2**	288	**A352_9.3 P112 BN112M2**	289
343	105	2.1	8.4	2230	**A202_8.4 S3 M3LB2**	280	**A202_8.4 P112 BN112M2**	281
409	88	3.4	7.0	3280	**A302_7.0 S3 M3LB2**	284	**A302_7.0 P112 BN112M2**	285
453	79	1.7	6.3	2240	**A102_6.3 S3 M3LB2**	276	**A102_6.3 P112 BN112M2**	277
536	67	2.8	5.4	2080	**A202_5.4 S3 M3LB2**	280	**A202_5.4 P112 BN112M2**	281

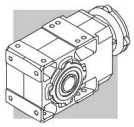

5.5 kW

n_2 min^{-1}	M_2 Nm	S	i	R_{n2} N			IEC	
3.0	15805	0.9	486.6	75000	**A904_486.6 S4 M4SA4**	314	**A904_486.6 P132 BN132S4**	315
3.2	14589	1.0	449.2	75000	**A904_449.2 S4 M4SA4**	314	**A904_449.2 P132 BN132S4**	315
3.7	12519	1.1	385.4	75000	**A904_385.4 S4 M4SA4**	314	**A904_385.4 P132 BN132S4**	315
4.0	11556	1.2	355.8	75000	**A904_355.8 S4 M4SA4**	314	**A904_355.8 P132 BN132S4**	315
4.7	9903	1.4	304.9	75000	**A904_304.9 S4 M4SA4**	314	**A904_304.9 P132 BN132S4**	315
5.1	9141	1.5	281.4	75000	**A904_281.4 S4 M4SA4**	314	**A904_281.4 P132 BN132S4**	315
5.2	9006	0.9	277.3	65000	**A804_277.3 S4 M4SA4**	311	**A804_277.3 P132 BN132S4**	312
6.2	7556	1.1	232.6	65000	**A804_232.6 S4 M4SA4**	311	**A804_232.6 P132 BN132S4**	312
6.4	7354	1.9	226.4	75000	**A904_226.4 S4 M4SA4**	314	**A904_226.4 P132 BN132S4**	315
6.7	6975	1.1	214.7	65000	**A804_214.7 S4 M4SA4**	311	**A804_214.7 P132 BN132S4**	312
6.9	6789	2.1	209.0	75000	**A904_209.0 S4 M4SA4**	314	**A904_209.0 P132 BN132S4**	315
8.0	5846	2.4	180.0	75000	**A904_180.0 S4 M4SA4**	314	**A904_180.0 P132 BN132S4**	315
8.4	5564	1.4	171.3	65000	**A804_171.3 S4 M4SA4**	311	**A804_171.3 P132 BN132S4**	312
8.5	5514	0.9	169.8	50000	**A704_169.8 S4 M4SA4**	308	**A704_169.8 P132 BN132S4**	309
8.7	5396	2.6	166.1	75000	**A904_166.1 S4 M4SA4**	314	**A904_166.1 P132 BN132S4**	315
9.2	5207	1.5	156.8	65000	**A803_156.8 S4 M4SA4**	311	**A803_156.8 P132 BN132S4**	312
9.5	5015	2.8	151.0	75000	**A903_151.0 S4 M4SA4**	314	**A903_151.0 P132 BN132S4**	315
9.9	4807	1.7	144.7	65000	**A803_144.7 S4 M4SA4**	311	**A803_144.7 P132 BN132S4**	312
10.2	4711	1.1	141.9	50000	**A703_141.9 S4 M4SA4**	308	**A703_141.9 P132 BN132S4**	309
10.3	4629	2.8	139.4	75000	**A903_139.4 S4 M4SA4**	314	**A903_139.4 P132 BN132S4**	315
11.0	4339	1.2	130.7	50000	**A703_130.7 S4 M4SA4**	308	**A703_130.7 P132 BN132S4**	309
11.4	4206	3.1	126.6	75000	**A903_126.6 S4 M4SA4**	314	**A903_126.6 P132 BN132S4**	315
11.5	4172	1.9	125.6	65000	**A803_125.6 S4 M4SA4**	311	**A803_125.6 P132 BN132S4**	312
11.9	4006	1.2	120.6	50000	**A703_120.6 S4 M4SA4**	308	**A703_120.6 P132 BN132S4**	309
12.4	3851	2.1	116.0	65000	**A803_116.0 S4 M4SA4**	311	**A803_116.0 P132 BN132S4**	312
13.8	3462	1.4	104.2	50000	**A703_104.2 S4 M4SA4**	308	**A703_104.2 P132 BN132S4**	309
13.8	3455	2.3	104.0	65000	**A803_104.0 S4 M4SA4**	311	**A803_104.0 P132 BN132S4**	312
15.0	3195	1.6	96.2	50000	**A703_96.2 S4 M4SA4**	308	**A703_96.2 P132 BN132S4**	309
15.0	3189	2.5	96.0	65000	**A803_96.0 S4 M4SA4**	311	**A803_96.0 P132 BN132S4**	312
16.1	2962	2.7	89.2	65000	**A803_89.2 S4 M4SA4**	311	**A803_89.2 P132 BN132S4**	312
16.7	2868	1.0	86.4	30000	**A603_86.4 S4 M4SA4**	304	**A603_86.4 P132 BN132S4**	305
16.8	2854	1.8	85.9	50000	**A703_85.9 S4 M4SA4**	308	**A703_85.9 P132 BN132S4**	309
17.5	2734	2.9	82.3	65000	**A803_82.3 S4 M4SA4**	311	**A803_82.3 P132 BN132S4**	312
18.1	2648	1.1	79.7	30000	**A603_79.7 S4 M4SA4**	304	**A603_79.7 P132 BN132S4**	305
18.2	2635	1.9	79.3	50000	**A703_79.3 S4 M4SA4**	308	**A703_79.3 P132 BN132S4**	309
19.9	2408	2.1	72.5	50000	**A703_72.5 S4 M4SA4**	308	**A703_72.5 P132 BN132S4**	309
19.9	2403	3.3	72.4	65000	**A803_72.4 S4 M4SA4**	311	**A803_72.4 P132 BN132S4**	312
20.5	2338	1.2	70.4	30000	**A603_70.4 S4 M4SA4**	304	**A603_70.4 P132 BN132S4**	305
21.5	2223	2.2	66.9	50000	**A703_66.9 S4 M4SA4**	308	**A703_66.9 P132 BN132S4**	309
22.2	2158	1.3	65.0	30000	**A603_65.0 S4 M4SA4**	304	**A603_65.0 P132 BN132S4**	305
22.4	2136	0.9	64.3	30000	**A553_64.3 S4 M4SA4**	300	**A553_64.3 P132 BN132S4**	301
25.0	1915	2.6	57.7	50000	**A703_57.7 S4 M4SA4**	308	**A703_57.7 P132 BN132S4**	309
25.9	1847	1.5	55.6	30000	**A603_55.6 S4 M4SA4**	304	**A603_55.6 P132 BN132S4**	305
27.1	1768	2.8	53.2	50000	**A703_53.2 S4 M4SA4**	308	**A703_53.2 P132 BN132S4**	309
28.1	1705	1.6	51.3	30000	**A603_51.3 S4 M4SA4**	304	**A603_51.3 P132 BN132S4**	305
28.3	1692	1.2	51.0	30000	**A553_51.0 S4 M4SA4**	300	**A553_51.0 P132 BN132S4**	301
29.4	1627	3.1	49.0	50000	**A703_49.0 S4 M4SA4**	308	**A703_49.0 P132 BN132S4**	309
32	1502	3.2	45.2	50000	**A703_45.2 S4 M4SA4**	308	**A703_45.2 P132 BN132S4**	309
32	1501	1.9	45.2	30000	**A603_45.2 S4 M4SA4**	304	**A603_45.2 P132 BN132S4**	305
32	1495	1.0	45.0	12400	**A503_45.0 S4 M4SA4**	296	**A503_45.0 P132 BN132S4**	297
35	1385	2.0	41.7	30000	**A603_41.7 S4 M4SA4**	304	**A603_41.7 P132 BN132S4**	305

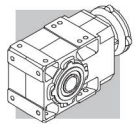

5.5 kW

n_2 min^{-1}	M_2 Nm	S	i	R_{n2} N			IEC	
35	1360	1.1	40.9	12600	**A503_40.9 S4 M4SA4**	296	**A503_40.9 P132 BN132S4**	297
36	1338	1.5	40.3	30000	**A553_40.3 S4 M4SA4**	300	**A553_40.3 P132 BN132S4**	301
40	1182	1.3	35.6	12700	**A503_35.6 S4 M4SA4**	296	**A503_35.6 P132 BN132S4**	297
42	1139	2.5	34.3	30000	**A603_34.3 S4 M4SA4**	304	**A603_34.3 P132 BN132S4**	305
44	1075	1.4	32.4	12700	**A503_32.4 S4 M4SA4**	296	**A503_32.4 P132 BN132S4**	297
45	1051	2.7	31.7	30000	**A603_31.7 S4 M4SA4**	304	**A603_31.7 P132 BN132S4**	305
48	994	2.0	29.9	30000	**A553_29.9 S4 M4SA4**	300	**A553_29.9 P132 BN132S4**	301
52	925	3.0	27.9	30000	**A603_27.9 S4 M4SA4**	304	**A603_27.9 P132 BN132S4**	305
54	878	1.7	26.4	12600	**A503_26.4 S4 M4SA4**	296	**A503_26.4 P132 BN132S4**	297
56	854	3.3	25.7	30000	**A603_25.7 S4 M4SA4**	304	**A603_25.7 P132 BN132S4**	305
60	799	1.9	24.0	12500	**A503_24.0 S4 M4SA4**	296	**A503_24.0 P132 BN132S4**	297
61	790	2.5	23.8	29800	**A553_23.8 S4 M4SA4**	300	**A553_23.8 P132 BN132S4**	301
69	718	1.7	20.9	14400	**A502_20.9 S4 M4SA4**	296	**A502_20.9 P132 BN132S4**	297
70	706	2.8	20.6	30000	**A602_20.6 S4 M4SA4**	304	**A602_20.6 P132 BN132S4**	305
75	660	2.7	19.2	29300	**A552_19.2 S4 M4SA4**	300	**A552_19.2 P132 BN132S4**	301
81	609	1.0	17.8	9280	**A412_17.8 S4 M4SA4**	292	**A412_17.8 P132 BN132S4**	293
86	574	3.5	16.7	30000	**A602_16.7 S4 M4SA4**	304	**A602_16.7 P132 BN132S4**	305
87	568	2.1	16.6	13600	**A502_16.6 S4 M4SA4**	296	**A502_16.6 P132 BN132S4**	297
89	552	1.1	16.1	9160	**A412_16.1 S4 M4SA4**	292	**A412_16.1 P132 BN132S4**	293
92	538	3.3	15.7	27700	**A552_15.7 S4 M4SA4**	300	**A552_15.7 P132 BN132S4**	301
105	472	1.2	13.8	8940	**A412_13.8 S4 M4SA4**	292	**A412_13.8 P132 BN132S4**	293
110	450	2.4	13.1	12800	**A502_13.1 S4 M4SA4**	296	**A502_13.1 P132 BN132S4**	297
122	404	1.0	11.8	6450	**A352_11.8 S4 M4SA4**	288	**A352_11.8 P132 BN132S4**	289
123	403	1.4	11.7	8670	**A412_11.7 S4 M4SA4**	292	**A412_11.7 P132 BN132S4**	293
135	365	1.1	10.6	6360	**A352_10.6 S4 M4SA4**	288	**A352_10.6 P132 BN132S4**	289
142	348	1.5	10.1	8440	**A412_10.1 S4 M4SA4**	292	**A412_10.1 P132 BN132S4**	293
148	334	3.0	9.7	11800	**A502_9.7 S4 M4SA4**	296	**A502_9.7 P132 BN132S4**	297
155	319	1.3	9.3	6240	**A352_9.3 S4 M4SA4**	288	**A352_9.3 P132 BN132S4**	289
157	316	1.7	9.2	8250	**A412_9.2 S4 M4SA4**	292	**A412_9.2 P132 BN132S4**	293
170	290	1.3	8.5	6140	**A352_8.5 S4 M4SA4**	288	**A352_8.5 P132 BN132S4**	289
173	286	1.9	8.3	8080	**A412_8.3 S4 M4SA4**	292	**A412_8.3 P132 BN132S4**	293
202	244	2.3	7.1	7790	**A412_7.1 S4 M4SA4**	292	**A412_7.1 P132 BN132S4**	293
205	241	1.5	7.0	5930	**A352_7.0 S4 M4SA4**	288	**A352_7.0 P132 BN132S4**	289
225	220	1.6	6.4	5820	**A352_6.4 S4 M4SA4**	288	**A352_6.4 P132 BN132S4**	289
246	201	2.7	11.7	7430	**A412_11.7 S4 M4SA2**	292	**A412_11.7 P132 BN132SA2**	293
266	186	1.8	5.4	5610	**A352_5.4 S4 M4SA4**	288	**A352_5.4 P132 BN132S4**	289
275	180	3.1	5.2	7230	**A412_5.2 S4 M4SA4**	292	**A412_5.2 P132 BN132S4**	293
285	173	2.5	10.1	7170	**A412_10.1 S4 M4SA2**	292	**A412_10.1 P132 BN132SA2**	293
411	120	3.1	7.0	5060	**A352_7.0 S4 M4SA2**	288	**A352_7.0 P132 BN132SA2**	289

7.5 kW

n_2 min^{-1}	M_2 Nm	S	i	R_{n2} N			IEC	
4.0	15759	0.9	355.8	75000	**A904_355.8 S4 M4LA4**	314	**A904_355.8 P132 BN132MA4**	315
4.7	13504	1.0	304.9	75000	**A904_304.9 S4 M4LA4**	314	**A904_304.9 P132 BN132MA4**	315
5.1	12465	1.1	281.4	75000	**A904_281.4 S4 M4LA4**	314	**A904_281.4 P132 BN132MA4**	315
6.4	10029	1.4	226.4	75000	**A904_226.4 S4 M4LA4**	314	**A904_226.4 P132 BN132MA4**	315
6.9	9257	1.5	209.0	75000	**A904_209.0 S4 M4LA4**	314	**A904_209.0 P132 BN132MA4**	315

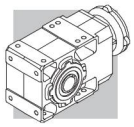

7.5 kW

n_2 min^{-1}	M_2 Nm	S	i	R_{n2} N	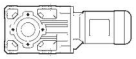		 IEC	
8.0	7971	1.8	180.0	75000	**A904_180.0 S4 M4LA4**	314	**A904_180.0 P132 BN132MA4**	315
8.4	7587	1.1	171.3	65000	**A804_171.3 S4 M4LA4**	311	**A804_171.3 P132 BN132MA4**	312
8.7	7358	1.9	166.1	75000	**A904_166.1 S4 M4LA4**	314	**A904_166.1 P132 BN132MA4**	315
9.2	7101	1.1	156.8	65000	**A803_156.8 S4 M4LA4**	311	**A803_156.8 P132 BN132MA4**	312
9.5	6839	2.0	151.0	75000	**A903_151.0 S4 M4LA4**	314	**A903_151.0 P132 BN132MA4**	315
9.9	6555	1.2	144.7	65000	**A803_144.7 S4 M4LA4**	311	**A803_144.7 P132 BN132MA4**	312
10.3	6313	2.0	139.4	75000	**A903_139.4 S4 M4LA4**	314	**A903_139.4 P132 BN132MA4**	315
11.4	5735	2.3	126.6	75000	**A903_126.6 S4 M4LA4**	314	**A903_126.6 P132 BN132MA4**	315
11.5	5689	1.4	125.6	65000	**A803_125.6 S4 M4LA4**	311	**A803_125.6 P132 BN132MA4**	312
11.9	5462	0.9	120.6	50000	**A703_120.6 S4 M4LA4**	308	**A703_120.6 P132 BN132MA4**	309
12.3	5294	2.6	116.9	75000	**A903_116.9 S4 M4LA4**	314	**A903_116.9 P132 BN132MA4**	315
12.4	5251	1.5	116.0	65000	**A803_116.0 S4 M4LA4**	311	**A803_116.0 P132 BN132MA4**	312
13.5	4838	2.9	106.8	75000	**A903_106.8 S4 M4LA4**	314	**A903_106.8 P132 BN132MA4**	315
13.8	4721	1.1	104.2	50000	**A703_104.2 S4 M4LA4**	308	**A703_104.2 P132 BN132MA4**	309
13.8	4711	1.7	104.0	65000	**A803_104.0 S4 M4LA4**	311	**A803_104.0 P132 BN132MA4**	312
14.6	4465	3.1	98.6	75000	**A903_98.6 S4 M4LA4**	314	**A903_98.6 P132 BN132MA4**	315
15.0	4357	1.1	96.2	50000	**A703_96.2 S4 M4LA4**	308	**A703_96.2 P132 BN132MA4**	309
15.0	4349	1.8	96.0	65000	**A803_96.0 S4 M4LA4**	311	**A803_96.0 P132 BN132MA4**	312
16.1	4039	2.0	89.2	65000	**A803_89.2 S4 M4LA4**	311	**A803_89.2 P132 BN132MA4**	312
16.8	3892	1.3	85.9	50000	**A703_85.9 S4 M4LA4**	308	**A703_85.9 P132 BN132MA4**	309
17.5	3728	2.1	82.3	65000	**A803_82.3 S4 M4LA4**	311	**A803_82.3 P132 BN132MA4**	312
18.2	3593	1.4	79.3	50000	**A703_79.3 S4 M4LA4**	308	**A703_79.3 P132 BN132MA4**	309
19.9	3284	1.5	72.5	50000	**A703_72.5 S4 M4LA4**	308	**A703_72.5 P132 BN132MA4**	309
19.9	3277	2.4	72.4	65000	**A803_72.4 S4 M4LA4**	311	**A803_72.4 P132 BN132MA4**	312
20.5	3188	0.9	70.4	30000	**A603_70.4 S4 M4LA4**	304	**A603_70.4 P132 BN132MA4**	305
21.5	3032	1.6	66.9	50000	**A703_66.9 S4 M4LA4**	308	**A703_66.9 P132 BN132MA4**	309
21.6	3025	2.6	66.8	65000	**A803_66.8 S4 M4LA4**	311	**A803_66.8 P132 BN132MA4**	312
22.2	2943	1.0	65.0	30000	**A603_65.0 S4 M4LA4**	304	**A603_65.0 P132 BN132MA4**	305
24.1	2707	3.0	59.8	63800	**A803_59.8 S4 M4LA4**	311	**A803_59.8 P132 BN132MA4**	312
25.0	2612	1.9	57.7	50000	**A703_57.7 S4 M4LA4**	308	**A703_57.7 P132 BN132MA4**	309
25.9	2518	1.1	55.6	30000	**A603_55.6 S4 M4LA4**	304	**A603_55.6 P132 BN132MA4**	305
26.1	2499	3.2	55.2	62600	**A803_55.2 S4 M4LA4**	311	**A803_55.2 P132 BN132MA4**	312
27.1	2411	2.1	53.2	50000	**A703_53.2 S4 M4LA4**	308	**A703_53.2 P132 BN132MA4**	309
28.1	2324	1.2	51.3	30000	**A603_51.3 S4 M4LA4**	304	**A603_51.3 P132 BN132MA4**	305
29.4	2219	2.3	49.0	50000	**A703_49.0 S4 M4LA4**	308	**A703_49.0 P132 BN132MA4**	309
32	2048	2.3	45.2	50000	**A703_45.2 S4 M4LA4**	308	**A703_45.2 P132 BN132MA4**	309
32	2046	1.4	45.2	30000	**A603_45.2 S4 M4LA4**	304	**A603_45.2 P132 BN132MA4**	305
35	1889	1.5	41.7	30000	**A603_41.7 S4 M4LA4**	304	**A603_41.7 P132 BN132MA4**	305
36	1825	1.1	40.3	30000	**A553_40.3 S4 M4LA4**	300	**A553_40.3 P132 BN132MA4**	301
38	1738	2.8	38.4	50000	**A703_38.4 S4 M4LA4**	308	**A703_38.4 P132 BN132MA4**	309
40	1612	0.9	35.6	10100	**A503_35.6 S4 M4LA4**	296	**A503_35.6 P132 BN132MA4**	297
41	1605	2.8	35.4	50000	**A703_35.4 S4 M4LA4**	308	**A703_35.4 P132 BN132MA4**	309
42	1553	1.8	34.3	30000	**A603_34.3 S4 M4LA4**	304	**A603_34.3 P132 BN132MA4**	305
44	1466	1.0	32.4	10300	**A503_32.4 S4 M4LA4**	296	**A503_32.4 P132 BN132MA4**	297
45	1434	2.0	31.7	30000	**A603_31.7 S4 M4LA4**	304	**A603_31.7 P132 BN132MA4**	305
48	1355	1.5	29.9	30000	**A553_29.9 S4 M4LA4**	300	**A553_29.9 P132 BN132MA4**	301
52	1261	2.2	27.9	30000	**A603_27.9 S4 M4LA4**	304	**A603_27.9 P132 BN132MA4**	305
54	1197	1.3	26.4	10700	**A503_26.4 S4 M4LA4**	296	**A503_26.4 P132 BN132MA4**	297
56	1164	2.4	25.7	30000	**A603_25.7 S4 M4LA4**	304	**A603_25.7 P132 BN132MA4**	305
60	1089	1.4	24.0	10800	**A503_24.0 S4 M4LA4**	296	**A503_24.0 P132 BN132MA4**	297
61	1077	1.8	23.8	28800	**A553_23.8 S4 M4LA4**	300	**A553_23.8 P132 BN132MA4**	301

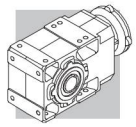

7.5 kW

n_2 min^{-1}	M_2 Nm	S	i	R_{n2} N			IEC	
69	979	1.2	20.9	13700	**A502_20.9 S4 M4LA4**	296	**A502_20.9 P132 BN132MA4**	297
70	963	2.1	20.6	30000	**A602_20.6 S4 M4LA4**	304	**A602_20.6 P132 BN132MA4**	305
75	900	2.0	19.2	28800	**A552_19.2 S4 M4LA4**	300	**A552_19.2 P132 BN132MA4**	301
86	783	2.6	16.7	30000	**A602_16.7 S4 M4LA4**	304	**A602_16.7 P132 BN132MA4**	305
87	775	1.5	16.6	13000	**A502_16.6 S4 M4LA4**	296	**A502_16.6 P132 BN132MA4**	297
92	734	2.5	15.7	27300	**A552_15.7 S4 M4LA4**	300	**A552_15.7 P132 BN132MA4**	301
105	644	0.9	13.8	8130	**A412_13.8 S4 M4LA4**	292	**A412_13.8 P132 BN132MA4**	293
110	613	1.8	13.1	12300	**A502_13.1 S4 M4LA4**	296	**A502_13.1 P132 BN132MA4**	297
110	612	2.9	13.1	26100	**A552_13.1 S4 M4LA4**	300	**A552_13.1 P132 BN132MA4**	301
113	594	3.4	12.7	30000	**A602_12.7 S4 M4LA4**	304	**A602_12.7 P132 BN132MA4**	305
123	549	1.0	11.7	7970	**A412_11.7 S4 M4LA4**	292	**A412_11.7 P132 BN132MA4**	293
142	474	1.1	10.1	7850	**A412_10.1 S4 M4LA4**	292	**A412_10.1 P132 BN132MA4**	293
148	455	2.2	9.7	11500	**A502_9.7 S4 M4LA4**	296	**A502_9.7 P132 BN132MA4**	297
155	436	0.9	9.3	5650	**A352_9.3 S4 M4LA4**	288	**A352_9.3 P132 BN132MA4**	289
157	430	1.3	9.2	7710	**A412_9.2 S4 M4LA4**	292	**A412_9.2 P132 BN132MA4**	293
170	396	1.0	8.5	5600	**A352_8.5 S4 M4LA4**	288	**A352_8.5 P132 BN132MA4**	289
173	390	1.4	8.3	7590	**A412_8.3 S4 M4LA4**	292	**A412_8.3 P132 BN132MA4**	293
186	362	2.6	7.7	10800	**A502_7.7 S4 M4LA4**	296	**A502_7.7 P132 BN132MA4**	297
202	333	1.7	7.1	7370	**A412_7.1 S4 M4LA4**	292	**A412_7.1 P132 BN132MA4**	293
205	329	1.1	7.0	5490	**A352_7.0 S4 M4LA4**	288	**A352_7.0 P132 BN132MA4**	289
225	300	1.2	6.4	5420	**A352_6.4 S4 M4LA4**	288	**A352_6.4 P132 BN132MA4**	289
266	253	1.3	5.4	5270	**A352_5.4 S4 M4LA4**	288	**A352_5.4 P132 BN132MA4**	289
275	245	2.2	5.2	6920	**A412_5.2 S4 M4LA4**	292	**A412_5.2 P132 BN132MA4**	293
315	214	2.5	9.2	6710	**A412_9.2 S4 M4SB2**	292	**A412_9.2 P132 BN132SB2**	293
348	194	2.6	8.3	6550	**A412_8.3 S4 M4SB2**	292	**A412_8.3 P132 BN132SB2**	293
413	163	2.3	7.0	4830	**A352_7.0 S4 M4SB2**	288	**A352_7.0 P132 BN132SB2**	289
536	126	2.7	5.4	4550	**A352_5.4 S4 M4SB2**	288	**A352_5.4 P132 BN132SB2**	289

9.2 kW

n_2 min^{-1}	M_2 Nm	S	i	R_{n2} N			IEC	
5.1	15291	0.9	281.4	75000	**A904_281.4 S4 M4LB4**	314	**A904_281.4 P132 BN132MB4**	315
6.4	12302	1.1	226.4	75000	**A904_226.4 S4 M4LB4**	314	**A904_226.4 P132 BN132MB4**	315
6.9	11356	1.2	209.0	75000	**A904_209.0 S4 M4LB4**	314	**A904_209.0 P132 BN132MB4**	315
8.0	9778	1.4	180.0	75000	**A904_180.0 S4 M4LB4**	314	**A904_180.0 P132 BN132MB4**	315
8.4	9307	0.9	171.3	65000	**A804_171.3 S4 M4LB4**	311	**A804_171.3 P132 BN132MB4**	312
8.7	9026	1.6	166.1	75000	**A904_166.1 S4 M4LB4**	314	**A904_166.1 P132 BN132MB4**	315
9.2	8711	0.9	156.8	65000	**A803_156.8 S4 M4LB4**	311	**A803_156.8 P132 BN132MB4**	312
9.5	8389	1.6	151.0	75000	**A903_151.0 S4 M4LB4**	314	**A903_151.0 P132 BN132MB4**	315
9.9	8040	1.0	144.7	65000	**A803_144.7 S4 M4LB4**	311	**A803_144.7 P132 BN132MB4**	312
10.3	7744	1.6	139.4	75000	**A903_139.4 S4 M4LB4**	314	**A903_139.4 P132 BN132MB4**	315
11.4	7035	1.9	126.6	75000	**A903_126.6 S4 M4LB4**	314	**A903_126.6 P132 BN132MB4**	315
11.5	6978	1.1	125.6	65000	**A803_125.6 S4 M4LB4**	311	**A803_125.6 P132 BN132MB4**	312
12.3	6494	2.2	116.9	75000	**A903_116.9 S4 M4LB4**	314	**A903_116.9 P132 BN132MB4**	315
12.4	6442	1.2	116.0	65000	**A803_116.0 S4 M4LB4**	311	**A803_116.0 P132 BN132MB4**	312
13.5	5934	2.4	106.8	75000	**A903_106.8 S4 M4LB4**	314	**A903_106.8 P132 BN132MB4**	315
13.8	5779	1.4	104.0	65000	**A803_104.0 S4 M4LB4**	311	**A803_104.0 P132 BN132MB4**	312
14.6	5478	2.6	98.6	75000	**A903_98.6 S4 M4LB4**	314	**A903_98.6 P132 BN132MB4**	315

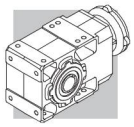

9.2 kW

n_2 min^{-1}	M_2 Nm	S	i	R_{n2} N	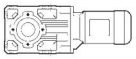		 IEC	
15.0	5345	0.9	96.2	50000	**A703_96.2 S4 M4LB4**	308	**A703_96.2 P132 BN132MB4**	309
15.0	5335	1.5	96.0	65000	**A803_96.0 S4 M4LB4**	311	**A803_96.0 P132 BN132MB4**	312
16.1	4954	1.6	89.2	65000	**A803_89.2 S4 M4LB4**	311	**A803_89.2 P132 BN132MB4**	312
16.5	4837	2.9	87.1	75000	**A903_87.1 S4 M4LB4**	314	**A903_87.1 P132 BN132MB4**	315
16.8	4774	1.0	85.9	50000	**A703_85.9 S4 M4LB4**	308	**A703_85.9 P132 BN132MB4**	309
17.5	4573	1.7	82.3	65000	**A803_82.3 S4 M4LB4**	311	**A803_82.3 P132 BN132MB4**	312
17.9	4465	3.1	80.4	75000	**A903_80.4 S4 M4LB4**	314	**A903_80.4 P132 BN132MB4**	315
18.2	4407	1.1	79.3	50000	**A703_79.3 S4 M4LB4**	308	**A703_79.3 P132 BN132MB4**	309
19.3	4137	3.4	74.5	75000	**A903_74.5 S4 M4LB4**	314	**A903_74.5 P132 BN132MB4**	315
19.9	4029	1.2	72.5	50000	**A703_72.5 S4 M4LB4**	308	**A703_72.5 P132 BN132MB4**	309
19.9	4020	2.0	72.4	65000	**A803_72.4 S4 M4LB4**	311	**A803_72.4 P132 BN132MB4**	312
21.5	3719	1.3	66.9	50000	**A703_66.9 S4 M4LB4**	308	**A703_66.9 P132 BN132MB4**	309
21.6	3711	2.2	66.8	63800	**A803_66.8 S4 M4LB4**	311	**A803_66.8 P132 BN132MB4**	312
24.1	3321	2.4	59.8	62400	**A803_59.8 S4 M4LB4**	311	**A803_59.8 P132 BN132MB4**	312
25.0	3204	1.6	57.7	50000	**A703_57.7 S4 M4LB4**	308	**A703_57.7 P132 BN132MB4**	309
25.9	3089	0.9	55.6	30000	**A603_55.6 S4 M4LB4**	304	**A603_55.6 P132 BN132MB4**	305
26.1	3065	2.6	55.2	61300	**A803_55.2 S4 M4LB4**	311	**A803_55.2 P132 BN132MB4**	312
27.1	2957	1.7	53.2	50000	**A703_53.2 S4 M4LB4**	308	**A703_53.2 P132 BN132MB4**	309
28.1	2851	1.0	51.3	30000	**A603_51.3 S4 M4LB4**	304	**A603_51.3 P132 BN132MB4**	305
29.4	2722	1.8	49.0	50000	**A703_49.0 S4 M4LB4**	308	**A703_49.0 P132 BN132MB4**	309
30	2677	3.0	48.2	59500	**A803_48.2 S4 M4LB4**	311	**A803_48.2 P132 BN132MB4**	312
32	2513	1.9	45.2	50000	**A703_45.2 S4 M4LB4**	308	**A703_45.2 P132 BN132MB4**	309
32	2510	1.1	45.2	30000	**A603_45.2 S4 M4LB4**	304	**A603_45.2 P132 BN132MB4**	305
32	2471	3.0	44.5	58400	**A803_44.5 S4 M4LB4**	311	**A803_44.5 P132 BN132MB4**	312
35	2317	1.2	41.7	30000	**A603_41.7 S4 M4LB4**	304	**A603_41.7 P132 BN132MB4**	305
38	2132	2.3	38.4	50000	**A703_38.4 S4 M4LB4**	308	**A703_38.4 P132 BN132MB4**	309
41	1968	2.3	35.4	50000	**A703_35.4 S4 M4LB4**	308	**A703_35.4 P132 BN132MB4**	309
42	1905	1.5	34.3	30000	**A603_34.3 S4 M4LB4**	304	**A603_34.3 P132 BN132MB4**	305
45	1759	1.6	31.7	30000	**A603_31.7 S4 M4LB4**	304	**A603_31.7 P132 BN132MB4**	305
48	1663	1.2	29.9	29100	**A553_29.9 S4 M4LB4**	300	**A553_29.9 P132 BN132MB4**	301
52	1547	1.8	27.9	30000	**A603_27.9 S4 M4LB4**	304	**A603_27.9 P132 BN132MB4**	305
54	1469	1.0	26.4	9130	**A503_26.4 S4 M4LB4**	296	**A503_26.4 P132 BN132MB4**	297
56	1428	2.0	25.7	30000	**A603_25.7 S4 M4LB4**	304	**A603_25.7 P132 BN132MB4**	305
60	1336	1.1	24.0	9370	**A503_24.0 S4 M4LB4**	296	**A503_24.0 P132 BN132MB4**	297
61	1322	1.5	23.8	27900	**A553_23.8 S4 M4LB4**	300	**A553_23.8 P132 BN132MB4**	301
68	1183	3.4	21.3	46000	**A703_21.3 S4 M4LB4**	308	**A703_21.3 P132 BN132MB4**	309
69	1200	1.0	20.9	13000	**A502_20.9 S4 M4LB4**	296	**A502_20.9 P132 BN132MB4**	297
70	1182	1.7	20.6	30000	**A602_20.6 S4 M4LB4**	304	**A602_20.6 P132 BN132MB4**	305
73	1092	3.4	19.7	45100	**A703_19.7 S4 M4LB4**	308	**A703_19.7 P132 BN132MB4**	309
75	1104	1.6	19.2	28400	**A552_19.2 S4 M4LB4**	300	**A552_19.2 P132 BN132MB4**	301
86	960	2.1	16.7	30000	**A602_16.7 S4 M4LB4**	304	**A602_16.7 P132 BN132MB4**	305
87	951	1.3	16.6	12500	**A502_16.6 S4 M4LB4**	296	**A502_16.6 P132 BN132MB4**	297
92	900	2.0	15.7	27000	**A552_15.7 S4 M4LB4**	300	**A552_15.7 P132 BN132MB4**	301
110	752	1.5	13.1	11900	**A502_13.1 S4 M4LB4**	296	**A502_13.1 P132 BN132MB4**	297
110	750	2.4	13.1	25800	**A552_13.1 S4 M4LB4**	300	**A552_13.1 P132 BN132MB4**	301
113	729	2.7	12.7	30000	**A602_12.7 S4 M4LB4**	304	**A602_12.7 P132 BN132MB4**	305
123	650	2.5	23.8	24100	**A553_23.8 S4 M4LA2**	300	**A553_23.8 P132 BN132M2**	301
139	594	3.0	10.4	24200	**A552_10.4 S4 M4LB4**	300	**A552_10.4 P132 BN132MB4**	301
140	592	3.4	10.3	30000	**A602_10.3 S4 M4LB4**	304	**A602_10.3 P132 BN132MB4**	305
142	581	0.9	10.1	7340	**A412_10.1 S4 M4LB4**	292	**A412_10.1 P132 BN132MB4**	293
148	559	1.8	9.7	11200	**A502_9.7 S4 M4LB4**	296	**A502_9.7 P132 BN132MB4**	297

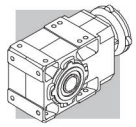

9.2 kW

n_2 min^{-1}	M_2 Nm	S	i	R_{n2} N			IEC	
157	528	1.0	9.2	7250	**A412_9.2 S4 M4LB4**	292	**A412_9.2 P132 BN132MB4**	293
173	478	1.2	8.3	7170	**A412_8.3 S4 M4LB4**	292	**A412_8.3 P132 BN132MB4**	293
186	444	2.1	7.7	10600	**A502_7.7 S4 M4LB4**	296	**A502_7.7 P132 BN132MB4**	297
202	409	1.3	7.1	7020	**A412_7.1 S4 M4LB4**	292	**A412_7.1 P132 BN132MB4**	293
205	403	0.9	7.0	5110	**A352_7.0 S4 M4LB4**	288	**A352_7.0 P132 BN132MB4**	289
225	368	1.0	6.4	5070	**A352_6.4 S4 M4LB4**	288	**A352_6.4 P132 BN132MB4**	289
266	311	1.1	5.4	4980	**A352_5.4 S4 M4LB4**	288	**A352_5.4 P132 BN132MB4**	289
275	301	1.8	5.2	6660	**A412_5.2 S4 M4LB4**	292	**A412_5.2 P132 BN132MB4**	293
319	259	2.0	9.2	6480	**A412_9.2 S4 M4LA2**	292	**A412_9.2 P132 BN132M2**	293
379	218	3.4	7.7	8780	**A502_7.7 S4 M4LA2**	296	**A502_7.7 P132 BN132M2**	297
541	153	2.2	5.4	4410	**A352_5.4 S4 M4LA2**	288	**A352_5.4 P132 BN132M2**	289
559	148	3.0	5.2	5690	**A412_5.2 S4 M4LA2**	292	**A412_5.2 P132 BN132M2**	293

11 kW

n_2 min^{-1}	M_2 Nm	S	i	R_{n2} N			IEC	
6.4	14709	1.0	226.4	75000	**A904_226.4 S4 M4LC4**	314	**A904_226.4 P160 BN160MR4**	315
6.9	13577	1.0	209.0	75000	**A904_209.0 S4 M4LC4**	314	**A904_209.0 P160 BN160MR4**	315
8.0	11691	1.2	180.0	75000	**A904_180.0 S4 M4LC4**	314	**A904_180.0 P160 BN160MR4**	315
8.7	10792	1.3	166.1	75000	**A904_166.1 S4 M4LC4**	314	**A904_166.1 P160 BN160MR4**	315
9.5	10030	1.4	151.0	75000	**A903_151.0 S4 M4LC4**	314	**A903_151.0 P160 BN160MR4**	315
10.3	9259	1.4	139.4	75000	**A903_139.4 S4 M4LC4**	314	**A903_139.4 P160 BN160MR4**	315
11.4	8412	1.6	126.6	75000	**A903_126.6 S4 M4LC4**	314	**A903_126.6 P160 BN160MR4**	315
11.5	8344	1.0	125.6	65000	**A803_125.6 S4 M4LC4**	311	**A803_125.6 P160 BN160MR4**	312
12.3	7765	1.8	116.9	75000	**A903_116.9 S4 M4LC4**	314	**A903_116.9 P160 BN160MR4**	315
12.4	7702	1.0	116.0	65000	**A803_116.0 S4 M4LC4**	311	**A803_116.0 P160 BN160MR4**	312
13.5	7095	2.0	106.8	75000	**A903_106.8 S4 M4LC4**	314	**A903_106.8 P160 BN160MR4**	315
13.8	6910	1.2	104.0	65000	**A803_104.0 S4 M4LC4**	311	**A803_104.0 P160 BN160MR4**	312
14.6	6549	2.1	98.6	75000	**A903_98.6 S4 M4LC4**	314	**A903_98.6 P160 BN160MR4**	315
15.0	6378	1.3	96.0	65000	**A803_96.0 S4 M4LC4**	311	**A803_96.0 P160 BN160MR4**	312
16.1	5923	1.4	89.2	65000	**A803_89.2 S4 M4LC4**	311	**A803_89.2 P160 BN160MR4**	312
16.5	5783	2.4	87.1	75000	**A903_87.1 S4 M4LC4**	314	**A903_87.1 P160 BN160MR4**	315
17.5	5468	1.5	82.3	64500	**A803_82.3 S4 M4LC4**	311	**A803_82.3 P160 BN160MR4**	312
17.9	5338	2.6	80.4	75000	**A903_80.4 S4 M4LC4**	314	**A903_80.4 P160 BN160MR4**	315
18.2	5269	0.9	79.3	50000	**A703_79.3 S4 M4LC4**	308	**A703_79.3 P160 BN160MR4**	309
19.3	4947	2.8	74.5	75000	**A903_74.5 S4 M4LC4**	314	**A903_74.5 P160 BN160MR4**	315
19.9	4817	1.0	72.5	50000	**A703_72.5 S4 M4LC4**	308	**A703_72.5 P160 BN160MR4**	309
19.9	4807	1.7	72.4	63200	**A803_72.4 S4 M4LC4**	311	**A803_72.4 P160 BN160MR4**	312
20.9	4566	3.1	68.8	75000	**A903_68.8 S4 M4LC4**	314	**A903_68.8 P160 BN160MR4**	315
21.5	4446	1.1	66.9	50000	**A703_66.9 S4 M4LC4**	308	**A703_66.9 P160 BN160MR4**	309
21.6	4437	1.8	66.8	62200	**A803_66.8 S4 M4LC4**	311	**A803_66.8 P160 BN160MR4**	312
24.1	3971	2.0	59.8	60900	**A803_59.8 S4 M4LC4**	311	**A803_59.8 P160 BN160MR4**	312
24.2	3960	3.5	59.6	75000	**A903_59.6 S4 M4LC4**	314	**A903_59.6 P160 BN160MR4**	315
25.0	3830	1.3	57.7	50000	**A703_57.7 S4 M4LC4**	308	**A703_57.7 P160 BN160MR4**	309
26.1	3665	2.2	55.2	59900	**A803_55.2 S4 M4LC4**	311	**A803_55.2 P160 BN160MR4**	312
27.1	3536	1.4	53.2	50000	**A703_53.2 S4 M4LC4**	308	**A703_53.2 P160 BN160MR4**	309
29.4	3255	1.5	49.0	50000	**A703_49.0 S4 M4LC4**	308	**A703_49.0 P160 BN160MR4**	309
30	3200	2.5	48.2	58300	**A803_48.2 S4 M4LC4**	311	**A803_48.2 P160 BN160MR4**	312

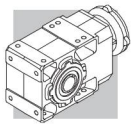

11 kW

n_2 min^{-1}	M_2 Nm	S	i	R_{n2} N			IEC	
32	3004	1.6	45.2	50000	**A703_45.2 S4 M4LC4**	308	**A703_45.2 P160 BN160MR4**	309
32	3001	0.9	45.2	30000	**A603_45.2 S4 M4LC4**	304	**A603_45.2 P160 BN160MR4**	305
32	2954	2.5	44.5	57300	**A803_44.5 S4 M4LC4**	311	**A803_44.5 P160 BN160MR4**	312
35	2771	1.0	41.7	30000	**A603_41.7 S4 M4LC4**	304	**A603_41.7 P160 BN160MR4**	305
37	2557	3.0	38.5	55500			**A803_38.5 P160 BN160MR4**	312
38	2549	1.9	38.4	50000	**A703_38.4 S4 M4LC4**	308	**A703_38.4 P160 BN160MR4**	309
41	2360	3.0	35.5	54500			**A803_35.5 P160 BN160MR4**	312
41	2353	1.9	35.4	50000	**A703_35.4 S4 M4LC4**	308	**A703_35.4 P160 BN160MR4**	309
42	2278	1.2	34.3	30000	**A603_34.3 S4 M4LC4**	304	**A603_34.3 P160 BN160MR4**	305
45	2103	1.3	31.7	30000	**A603_31.7 S4 M4LC4**	304	**A603_31.7 P160 BN160MR4**	305
47	2031	3.2	30.6	52600			**A803_30.6 P160 BN160MR4**	312
48	1999	2.3	30.1	49400			**A703_30.1 P160 BN160MR4**	309
51	1875	3.5	28.2	51600			**A803_28.2 P160 BN160MR4**	312
52	1850	1.5	27.9	30000	**A603_27.9 S4 M4LC4**	304	**A603_27.9 P160 BN160MR4**	305
52	1845	2.3	27.8	48500			**A703_27.8 P160 BN160MR4**	309
56	1708	1.6	25.7	30000	**A603_25.7 S4 M4LC4**	304	**A603_25.7 P160 BN160MR4**	305
60	1597	0.9	24.0	7800	**A503_24.0 S4 M4LC4**	296	**A503_24.0 P160 BN160MR4**	297
61	1562	2.8	23.5	46600			**A703_23.5 P160 BN160MR4**	309
68	1415	2.8	21.3	45500	**A703_21.3 S4 M4LC4**	308	**A703_21.3 P160 BN160MR4**	309
70	1413	1.4	20.6	30000	**A602_20.6 S4 M4LC4**	304	**A602_20.6 P160 BN160MR4**	305
73	1306	2.8	19.7	44500	**A703_19.7 S4 M4LC4**	308	**A703_19.7 P160 BN160MR4**	309
75	1319	1.4	19.2	27900	**A552_19.2 S4 M4LC4**	300	**A552_19.2 P160 BN160MR4**	301
86	1148	1.7	16.7	30000	**A602_16.7 S4 M4LC4**	304	**A602_16.7 P160 BN160MR4**	305
87	1137	1.1	16.6	12000	**A502_16.6 S4 M4LC4**	296	**A502_16.6 P160 BN160MR4**	297
92	1076	1.7	15.7	26600	**A552_15.7 S4 M4LC4**	300	**A552_15.7 P160 BN160MR4**	301
110	899	1.2	13.1	11500	**A502_13.1 S4 M4LC4**	296	**A502_13.1 P160 BN160MR4**	297
110	897	2.0	13.1	25400	**A552_13.1 S4 M4LC4**	300	**A552_13.1 P160 BN160MR4**	301
113	872	2.3	12.7	30000	**A602_12.7 S4 M4LC4**	304	**A602_12.7 P160 BN160MR4**	305
123	779	2.1	23.8	23600	**A553_23.8 S4 M4LC2**	300	**A553_23.8 P160 BN160MR2**	301
139	710	2.5	10.4	24000	**A552_10.4 S4 M4LC4**	300	**A552_10.4 P160 BN160MR4**	301
140	708	2.8	10.3	30000	**A602_10.3 S4 M4LC4**	304	**A602_10.3 P160 BN160MR4**	305
148	668	1.5	9.7	10800	**A502_9.7 S4 M4LC4**	296	**A502_9.7 P160 BN160MR4**	297
170	581	3.1	8.5	22800	**A552_8.5 S4 M4LC4**	300	**A552_8.5 P160 BN160MR4**	301
186	531	1.8	7.7	10300	**A502_7.7 S4 M4LC4**	296	**A502_7.7 P160 BN160MR4**	297
202	489	1.1	7.1	6640	**A412_7.1 S4 M4LC4**	292		
223	443	2.0	13.1	9920	**A502_13.1 S4 M4LC2**	296	**A502_13.1 P160 BN160MR2**	297
248	399	1.0	11.8	4690	**A352_11.8 S4 M4LC2**	288		
275	360	1.1	10.6	4660	**A352_10.6 S4 M4LC2**	288		
317	311	1.7	9.2	6230	**A412_9.2 S4 M4LC2**	292		
377	262	2.8	7.7	8650	**A502_7.7 S4 M4LC2**	296	**A502_7.7 P160 BN160MR2**	297
416	238	1.6	7.0	4440	**A352_7.0 S4 M4LC2**	288		
456	217	1.6	6.4	4380	**A352_6.4 S4 M4LC2**	288		
539	183	1.9	5.4	4250	**A352_5.4 S4 M4LC2**	288		

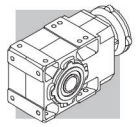

15 kW

n_2 min^{-1}	M_2 Nm	S	i	R_{n2} N			IEC	
8.1	15724	0.9	180.0	75000			**A904_180.0 P160 BN160L4**	315
8.8	14514	1.0	166.1	75000			**A904_166.1 P160 BN160L4**	315
9.7	13490	1.0	151.0	75000	**A903_151.0 S5 M5SB4**	314	**A903_151.0 P160 BN160L4**	315
10.5	12452	1.0	139.4	75000	**A903_139.4 S5 M5SB4**	314	**A903_139.4 P160 BN160L4**	315
11.5	11314	1.2	126.6	75000	**A903_126.6 S5 M5SB4**	314	**A903_126.6 P160 BN160L4**	315
12.5	10443	1.3	116.9	75000	**A903_116.9 S5 M5SB4**	314	**A903_116.9 P160 BN160L4**	315
13.7	9543	1.5	106.8	75000	**A903_106.8 S5 M5SB4**	314	**A903_106.8 P160 BN160L4**	315
14.8	8808	1.6	98.6	75000	**A903_98.6 S5 M5SB4**	314	**A903_98.6 P160 BN160L4**	315
15.2	8578	0.9	96.0	60600	**A803_96.0 S5 M5SB4**	311	**A803_96.0 P160 BN160L4**	312
16.4	7967	1.0	89.2	60400	**A803_89.2 S5 M5SB4**	311	**A803_89.2 P160 BN160L4**	312
16.8	7778	1.8	87.1	75000	**A903_87.1 S5 M5SB4**	314	**A903_87.1 P160 BN160L4**	315
17.7	7354	1.1	82.3	59800	**A803_82.3 S5 M5SB4**	311	**A803_82.3 P160 BN160L4**	312
18.2	7180	1.9	80.4	75000	**A903_80.4 S5 M5SB4**	314	**A903_80.4 P160 BN160L4**	315
19.6	6654	2.1	74.5	75000	**A903_74.5 S5 M5SB4**	314	**A903_74.5 P160 BN160L4**	315
20.2	6465	1.2	72.4	59100	**A803_72.4 S5 M5SB4**	311	**A803_72.4 P160 BN160L4**	312
21.2	6142	2.3	68.8	75000	**A903_68.8 S5 M5SB4**	314	**A903_68.8 P160 BN160L4**	315
21.9	5968	1.3	66.8	58300	**A803_66.8 S5 M5SB4**	311	**A803_66.8 P160 BN160L4**	312
24.4	5340	1.5	59.8	57500	**A803_59.8 S5 M5SB4**	311	**A803_59.8 P160 BN160L4**	312
24.5	5326	2.6	59.6	75000	**A903_59.6 S5 M5SB4**	314	**A903_59.6 P160 BN160L4**	315
25.3	5152	1.0	57.7	50000	**A703_57.7 S5 M5SB4**	308	**A703_57.7 P160 BN160L4**	309
26.5	4930	1.6	55.2	56700	**A803_55.2 S5 M5SB4**	311	**A803_55.2 P160 BN160L4**	312
26.5	4916	2.8	55.0	75000	**A903_55.0 S5 M5SB4**	314	**A903_55.0 P160 BN160L4**	315
27.4	4755	1.1	53.2	50000	**A703_53.2 S5 M5SB4**	308	**A703_53.2 P160 BN160L4**	309
29.8	4377	1.1	49.0	50000	**A703_49.0 S5 M5SB4**	308	**A703_49.0 P160 BN160L4**	309
30	4315	3.2	48.3	74900			**A903_48.3 P160 BN160L4**	315
30	4304	1.9	48.2	55500	**A803_48.2 S5 M5SB4**	311	**A803_48.2 P160 BN160L4**	312
32	4041	1.2	45.2	50000	**A703_45.2 S5 M5SB4**	308	**A703_45.2 P160 BN160L4**	309
33	3983	3.5	44.6	73500			**A903_44.6 P160 BN160L4**	315
33	3973	1.9	44.5	54700	**A803_44.5 S5 M5SB4**	311	**A803_44.5 P160 BN160L4**	312
38	3439	2.2	38.5	53200			**A803_38.5 P160 BN160L4**	312
38	3429	1.4	38.4	49900	**A703_38.4 S5 M5SB4**	308	**A703_38.4 P160 BN160L4**	309
41	3175	2.2	35.5	52300			**A803_35.5 P160 BN160L4**	312
41	3165	1.4	35.4	49100	**A703_35.4 S5 M5SB4**	308	**A703_35.4 P160 BN160L4**	309
43	3064	0.9	34.3	30000	**A603_34.3 S5 M5SB4**	304	**A603_34.3 P160 BN160L4**	305
46	2828	1.0	31.7	30000	**A603_31.7 S5 M5SB4**	304	**A603_31.7 P160 BN160L4**	305
48	2731	2.4	30.6	50800			**A803_30.6 P160 BN160L4**	312
49	2689	1.7	30.1	47600			**A703_30.1 P160 BN160L4**	309
52	2521	2.6	28.2	49900			**A803_28.2 P160 BN160L4**	312
52	2488	1.1	27.9	30000	**A603_27.9 S5 M5SB4**	304	**A603_27.9 P160 BN160L4**	305
53	2482	1.7	27.8	46700			**A703_27.8 P160 BN160L4**	309
57	2297	1.2	25.7	30000	**A603_25.7 S5 M5SB4**	304	**A603_25.7 P160 BN160L4**	305
61	2125	0.9	23.8	25000	**A553_23.8 S5 M5SB4**	300	**A553_23.8 P160 BN160L4**	301
62	2101	2.0	23.5	45100	**A703_23.5 S5 M5SB4**	308	**A703_23.5 P160 BN160L4**	309
69	1903	2.1	21.3	44100	**A703_21.3 S5 M5SB4**	308	**A703_21.3 P160 BN160L4**	309
70	1871	3.5	20.9	46600	**A803_20.9 S5 M5SB4**	311	**A803_20.9 P160 BN160L4**	312
71	1900	1.1	20.6	30000	**A602_20.6 S5 M5SB4**	304	**A602_20.6 P160 BN160L4**	305
74	1757	2.1	19.7	43300	**A703_19.7 S5 M5SB4**	308	**A703_19.7 P160 BN160L4**	309
75	1728	3.5	19.3	45700	**A803_19.3 S5 M5SB4**	311	**A803_19.3 P160 BN160L4**	312
76	1775	1.0	19.2	26800	**A552_19.2 S5 M5SB4**	300	**A552_19.2 P160 BN160L4**	301
87	1544	1.3	16.7	30000	**A602_16.7 S5 M5SB4**	304	**A602_16.7 P160 BN160L4**	305
87	1491	2.7	16.7	41600	**A703_16.7 S5 M5SB4**	308	**A703_16.7 P160 BN160L4**	309

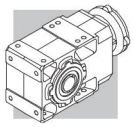

15 kW

n_2 min^{-1}	M_2 Nm	S	i	R_{n2} N			IEC	
93	1447	1.2	15.7	25700	**A552_15.7 S5 M5SB4**	300	**A552_15.7 P160 BN160L4**	301
95	1376	2.7	15.4	40800	**A703_15.4 S5 M5SB4**	308	**A703_15.4 P160 BN160L4**	309
111	1209	0.9	13.1	10500			**A502_13.1 P160 BN160L4**	297
112	1207	1.5	13.1	24700	**A552_13.1 S5 M5SB4**	300	**A552_13.1 P160 BN160L4**	301
112	1169	3.3	13.1	39200	**A703_13.1 S5 M5SB4**	308	**A703_13.1 P160 BN160L4**	309
115	1172	1.7	12.7	30000	**A602_12.7 S5 M5SB4**	304	**A602_12.7 P160 BN160L4**	305
121	1079	3.3	12.1	38400	**A703_12.1 S5 M5SB4**	308	**A703_12.1 P160 BN160L4**	309
123	1059	1.5	23.8	22600	**A553_23.8 S5 M5SB4**	300	**A553_23.8 P160 BN160L4**	301
141	956	1.9	10.4	23400	**A552_10.4 S5 M5SB4**	300	**A552_10.4 P160 BN160L4**	301
142	952	2.1	10.3	30000	**A602_10.3 S5 M5SB4**	304	**A602_10.3 P160 BN160L4**	305
150	898	1.1	9.7	10100			**A502_9.7 P160 BN160L4**	297
173	781	2.3	8.5	22200	**A552_8.5 S5 M5SB4**	300	**A552_8.5 P160 BN160L4**	301
186	726	2.8	7.9	28300	**A602_7.9 S5 M5SB4**	304	**A602_7.9 P160 BN160L4**	305
189	714	1.3	7.7	9750		296	**A502_7.7 P160 BN160L4**	297
228	592	2.9	6.4	20700	**A552_6.4 S5 M5SB4**	300	**A552_6.4 P160 BN160L4**	301
295	456	3.5	4.9	19400	**A552_4.9 S5 M5SB4**	300	**A552_4.9 P160 BN160L4**	301
301	448	1.8	9.7	8830			**A502_9.7 P160 BN160MB2**	297
352	383	1.3	8.3	5630			**A412_8.3 P160 BN160MB2**	293
379	356	2.1	7.7	8350			**A502_7.7 P160 BN160MB2**	297

18.5 kW

n_2 min^{-1}	M_2 Nm	S	i	R_{n2} N			IEC	
11.5	13954	0.9	126.6	75000	**A903_126.6 S5 M5LA4**	314	**A903_126.6 P180 BN180M4**	315
12.5	12880	1.1	116.9	75000	**A903_116.9 S5 M5LA4**	314	**A903_116.9 P180 BN180M4**	315
13.7	11769	1.2	106.8	75000	**A903_106.8 S5 M5LA4**	314	**A903_106.8 P180 BN180M4**	315
14.8	10864	1.3	98.6	75000	**A903_98.6 S5 M5LA4**	314	**A903_98.6 P180 BN180M4**	315
16.8	9593	1.5	87.1	75000	**A903_87.1 S5 M5LA4**	314	**A903_87.1 P180 BN180M4**	315
18.2	8855	1.6	80.4	75000	**A903_80.4 S5 M5LA4**	314	**A903_80.4 P180 BN180M4**	315
19.6	8206	1.7	74.5	75000	**A903_74.5 S5 M5LA4**	314	**A903_74.5 P180 BN180M4**	315
20.2	7973	1.0	72.4	55600	**A803_72.4 S5 M5LA4**	311	**A803_72.4 P180 BN180M4**	312
21.2	7575	1.8	68.8	75000	**A903_68.8 S5 M5LA4**	314	**A903_68.8 P180 BN180M4**	315
21.9	7360	1.1	66.8	55100			**A803_66.8 P180 BN180M4**	312
24.4	6586	1.2	59.8	54700	**A803_59.8 S5 M5LA4**	311	**A803_59.8 P180 BN180M4**	312
24.5	6568	2.1	59.6	75000	**A903_59.6 S5 M5LA4**	314	**A903_59.6 P180 BN180M4**	315
26.5	6080	1.3	55.2	54100	**A803_55.2 S5 M5LA4**	311	**A803_55.2 P180 BN180M4**	312
26.5	6063	2.3	55.0	74900	**A903_55.0 S5 M5LA4**	314	**A903_55.0 P180 BN180M4**	315
29.8	5399	0.9	49.0	49600	**A703_49.0 S5 M5LA4**	308	**A703_49.0 P180 BN180M4**	309
30	5322	2.6	48.3	73100			**A903_48.3 P180 BN180M4**	315
30	5309	1.5	48.2	53200	**A803_48.2 S5 M5LA4**	311	**A803_48.2 P180 BN180M4**	312
32	4983	1.0	45.2	49000	**A703_45.2 S5 M5LA4**	308	**A703_45.2 P180 BN180M4**	309
33	4912	2.9	44.6	71800			**A903_44.6 P180 BN180M4**	315
33	4900	1.5	44.5	52500	**A803_44.5 S5 M5LA4**	311	**A803_44.5 P180 BN180M4**	312
38	4276	3.3	38.8	69700			**A903_38.8 P180 BN180M4**	315
38	4242	1.8	38.5	51400			**A803_38.5 P180 BN180M4**	312
38	4229	1.1	38.4	48000	**A703_38.4 S5 M5LA4**	308	**A703_38.4 P180 BN180M4**	309
41	3947	3.5	35.8	68500			**A903_35.8 P180 BN180M4**	315
41	3916	1.8	35.5	50600			**A803_35.5 P180 BN180M4**	312

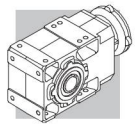

18.5 kW

n_2 min^{-1}	M_2 Nm	S	i	R_{n2} N			IEC	
41	3904	1.2	35.4	47300	**A703_35.4 S5 M5LA4**	308	**A703_35.4 P180 BN180M4**	309
48	3369	1.9	30.6	49300			**A803_30.6 P180 BN180M4**	312
49	3316	1.4	30.1	46100			**A703_30.1 P180 BN180M4**	309
52	3110	2.1	28.2	48500			**A803_28.2 P180 BN180M4**	312
52	3069	0.9	27.9	30000	**A603_27.9 S5 M5LA4**	304	**A603_27.9 P180 BN180M4**	305
53	3061	1.4	27.8	45300			**A703_27.8 P180 BN180M4**	309
57	2833	1.0	25.7	30000	**A603_25.7 S5 M5LA4**	304	**A603_25.7 P180 BN180M4**	305
60	2699	2.5	24.5	47200			**A803_24.5 P180 BN180M4**	312
62	2591	1.7	23.5	43900			**A703_23.5 P180 BN180M4**	309
65	2492	2.5	22.6	46300			**A803_22.6 P180 BN180M4**	312
69	2347	1.7	21.3	43000	**A703_21.3 S5 M5LA4**	308	**A703_21.3 P180 BN180M4**	309
70	2308	2.8	20.9	45600	**A803_20.9 S5 M5LA4**	311	**A803_20.9 P180 BN180M4**	312
74	2167	1.7	19.7	42300	**A703_19.7 S5 M5LA4**	308	**A703_19.7 P180 BN180M4**	309
75	2131	2.8	19.3	44800	**A803_19.3 S5 M5LA4**	311	**A803_19.3 P180 BN180M4**	312
87	1905	1.0	16.7	30000	**A602_16.7 S5 M5LA4**	304	**A602_16.7 P180 BN180M4**	305
87	1839	2.2	16.7	40800	**A703_16.7 S5 M5LA4**	308	**A703_16.7 P180 BN180M4**	309
93	1785	1.0	15.7	25000	**A552_15.7 S5 M5LA4**	300	**A552_15.7 P180 BN180M4**	301
95	1697	2.2	15.4	40100	**A703_15.4 S5 M5LA4**	308	**A703_15.4 P180 BN180M4**	309
112	1488	1.2	13.1	24100	**A552_13.1 S5 M5LA4**	300	**A552_13.1 P180 BN180M4**	301
112	1442	2.7	13.1	38600	**A703_13.1 S5 M5LA4**	308	**A703_13.1 P180 BN180M4**	309
115	1446	1.4	12.7	30000	**A602_12.7 S5 M5LA4**	304	**A602_12.7 P180 BN180M4**	305
121	1331	2.7	12.1	37800	**A703_12.1 S5 M5LA4**	308	**A703_12.1 P180 BN180M4**	309
123	1306	1.2	23.8	21600	**A553_23.8 S5 M5SC2**	300	**A553_23.8 P160 BN160L2**	301
141	1179	1.5	10.4	22900	**A552_10.4 S5 M5LA4**	300	**A552_10.4 P180 BN180M4**	301
142	1174	1.7	10.3	29900	**A602_10.3 S5 M5LA4**	304	**A602_10.3 P180 BN180M4**	305
143	1127	2.9	10.2	36300	**A703_10.2 S5 M5LA4**	308	**A703_10.2 P180 BN180M4**	309
150	1108	0.9	9.7	9530	**A502_9.7 S5 M5LA4**	296	**A502_9.7 P180 BN180M4**	297
155	1040	2.9	9.4	35600	**A703_9.4 S5 M5LA4**	308	**A703_9.4 P180 BN180M4**	309
173	963	1.9	8.5	21900	**A552_8.5 S5 M5LA4**	300	**A552_8.5 P180 BN180M4**	301
186	895	2.2	7.9	27900	**A602_7.9 S5 M5LA4**	304	**A602_7.9 P180 BN180M4**	305
189	881	1.1	7.7	9260			**A502_7.7 P180 BN180M4**	297
228	730	2.3	6.4	20400	**A552_6.4 S5 M5LA4**	300	**A552_6.4 P180 BN180M4**	301
295	563	2.8	4.9	19100	**A552_4.9 S5 M5LA4**	300	**A552_4.9 P180 BN180M4**	301
379	439	1.7	7.7	8100			**A502_7.7 P160 BN160L2**	297

22 kW

n_2 min^{-1}	M_2 Nm	S	i	R_{n2} N			IEC	
12.5	15317	0.9	116.9	75000			**A903_116.9 P180 BN180L4**	315
13.7	13996	1.0	106.8	75000			**A903_106.8 P180 BN180L4**	315
14.8	12919	1.1	98.6	75000			**A903_98.6 P180 BN180L4**	315
16.8	11408	1.2	87.1	75000			**A903_87.1 P180 BN180L4**	315
18.2	10530	1.3	80.4	75000			**A903_80.4 P180 BN180L4**	315
19.6	9758	1.4	74.5	75000			**A903_74.5 P180 BN180L4**	315
21.2	9008	1.6	68.8	75000			**A903_68.8 P180 BN180L4**	315
21.9	8753	0.9	66.8	51900			**A803_66.8 P180 BN180L4**	312
24.4	7832	1.0	59.8	51800			**A803_59.8 P180 BN180L4**	312
24.5	7811	1.8	59.6	73800			**A903_59.6 P180 BN180L4**	315

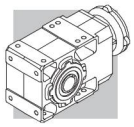

22 kW

n_2 min^{-1}	M_2 Nm	S	i	R_{n2} N			IEC	
26.5	7230	1.1	55.2	51400			**A803_55.2 P180 BN180L4**	312
26.5	7210	1.9	55.0	72700			**A903_55.0 P180 BN180L4**	315
30	6328	2.2	48.3	71100			**A903_48.3 P180 BN180L4**	315
30	6313	1.3	48.2	50900			**A803_48.2 P180 BN180L4**	312
33	5842	2.4	44.6	70000			**A903_44.6 P180 BN180L4**	315
33	5827	1.3	44.5	50300			**A803_44.5 P180 BN180L4**	312
38	5085	2.8	38.8	68100			**A903_38.8 P180 BN180L4**	315
38	5044	1.5	38.5	49500			**A803_38.5 P180 BN180L4**	312
38	5029	1.0	38.4	46000			**A703_38.4 P180 BN180L4**	309
41	4694	2.9	35.8	67000			**A903_35.8 P180 BN180L4**	315
41	4656	1.5	35.5	48900			**A803_35.5 P180 BN180L4**	312
41	4642	1.0	35.4	45500			**A703_35.4 P180 BN180L4**	309
46	4127	3.4	31.5	65200			**A903_31.5 P180 BN180L4**	315
48	4006	1.6	30.6	47800			**A803_30.6 P180 BN180L4**	312
49	3944	1.2	30.1	44500			**A703_30.1 P180 BN180L4**	309
50	3810	3.4	29.1	64000			**A903_29.1 P180 BN180L4**	315
52	3698	1.8	28.2	47100			**A803_28.2 P180 BN180L4**	312
53	3640	1.2	27.8	43900			**A703_27.8 P180 BN180L4**	309
60	3210	2.1	24.5	45900			**A803_24.5 P180 BN180L4**	312
62	3082	1.4	23.5	42700			**A703_23.5 P180 BN180L4**	309
65	2963	2.1	22.6	45200			**A803_22.6 P180 BN180L4**	312
69	2791	1.4	21.3	41900			**A703_21.3 P180 BN180L4**	309
70	2745	2.4	20.9	44600			**A803_20.9 P180 BN180L4**	312
74	2577	1.4	19.7	41200			**A703_19.7 P180 BN180L4**	309
75	2534	2.4	19.3	43800			**A803_19.3 P180 BN180L4**	312
87	2193	3.0	16.7	42500			**A803_16.7 P180 BN180L4**	312
87	2187	1.8	16.7	39900			**A703_16.7 P180 BN180L4**	309
94	2024	3.0	15.5	41700			**A803_15.5 P180 BN180L4**	312
95	2018	1.8	15.4	39200			**A703_15.4 P180 BN180L4**	309
112	1770	1.0	13.1	23500			**A552_13.1 P180 BN180L4**	301
112	1715	2.2	13.1	37900			**A703_13.1 P180 BN180L4**	309
115	1719	1.2	12.7	30000			**A602_12.7 P180 BN180L4**	305
121	1583	2.2	12.1	37200			**A703_12.1 P180 BN180L4**	309
123	1553	1.0	23.8	20900	**A553_23.8 S5 M5LA2**	300	**A553_23.8 P180 BN180M2**	301
141	1401	1.3	10.4	22400			**A552_10.4 P180 BN180L4**	301
142	1396	1.4	10.3	29300			**A602_10.3 P180 BN180L4**	305
143	1340	2.4	10.2	35800			**A703_10.2 P180 BN180L4**	309
155	1237	2.4	9.4	35100			**A703_9.4 P180 BN180L4**	309
173	1145	1.6	8.5	21400			**A552_8.5 P180 BN180L4**	301
186	1064	1.9	7.9	27500			**A602_7.9 P180 BN180L4**	305
189	1047	0.9	7.7	8760			**A502_7.7 P180 BN180L4**	297
228	868	2.0	6.4	20100			**A552_6.4 P180 BN180L4**	301
283	698	2.6	10.4	19100	**A552_10.4 S5 M5LA2**	300	**A552_10.4 P180 BN180M2**	301
295	669	2.4	4.9	18900			**A552_4.9 P180 BN180L4**	301
346	571	3.0	8.5	18200	**A552_8.5 S5 M5LA2**	300	**A552_8.5 P180 BN180M2**	301
379	522	1.4	7.7	7860			**A502_7.7 P180 BN180M2**	297

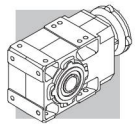

30 kW

n_2 min^{-1}	M_2 Nm	S	i	R_{n2} N	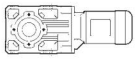		 IEC	
16.8	15556	0.9	87.1	70100			**A903_87.1 P200 BN200L4**	315
18.2	14360	1.0	80.4	70000			**A903_80.4 P200 BN200L4**	315
19.6	13307	1.1	74.5	69700			**A903_74.5 P200 BN200L4**	315
21.2	12283	1.1	68.8	69200			**A903_68.8 P200 BN200L4**	315
24.5	10651	1.3	59.6	68500			**A903_59.6 P200 BN200L4**	315
26.5	9832	1.4	55.0	67800			**A903_55.0 P200 BN200L4**	315
30.0	8630	1.6	48.3	66900			**A903_48.3 P200 BN200L4**	315
30	8609	0.9	48.2	45700			**A803_48.2 P200 BN200L4**	312
33	7966	1.8	44.6	66000			**A903_44.6 P200 BN200L4**	315
33	7946	0.9	44.5	45500			**A803_44.5 P200 BN200L4**	312
38	6934	2.0	38.8	64700			**A903_38.8 P200 BN200L4**	315
38	6879	1.1	38.5	45300			**A803_38.5 P200 BN200L4**	312
41	6400	2.1	35.8	63800			**A903_35.8 P200 BN200L4**	315
41	6349	1.1	35.5	45000			**A803_35.5 P200 BN200L4**	312
46	5628	2.5	31.5	62400			**A903_31.5 P200 BN200L4**	315
48	5463	1.2	30.6	44500			**A803_30.6 P200 BN200L4**	312
50	5195	2.5	29.1	61400			**A903_29.1 P200 BN200L4**	315
52	5043	1.3	28.2	44000			**A803_28.2 P200 BN200L4**	312
60	4377	1.5	24.5	43300			**A803_24.5 P200 BN200L4**	312
61	4307	3.1	24.1	59200			**A903_24.1 P200 BN200L4**	315
62	4202	1.0	23.5	40100			**A703_23.5 P200 BN200L4**	309
65	4041	1.5	22.6	42700			**A803_22.6 P200 BN200L4**	312
66	3976	3.1	22.3	58200			**A903_22.3 P200 BN200L4**	315
70	3752	3.3	21.0	57500			**A903_21.0 P200 BN200L4**	315
70	3743	1.7	20.9	42300			**A803_20.9 P200 BN200L4**	312
75	3463	3.3	19.4	56500			**A903_19.4 P200 BN200L4**	315
75	3455	1.8	19.3	41700			**A803_19.3 P200 BN200L4**	312
87	2991	2.2	16.7	40700			**A803_16.7 P200 BN200L4**	312
87	2982	1.3	16.7	38100			**A703_16.7 P200 BN200L4**	309
94	2761	2.2	15.5	40000			**A803_15.5 P200 BN200L4**	312
95	2752	1.3	15.4	37500			**A703_15.4 P200 BN200L4**	309
110	2375	2.8	13.3	38900			**A803_13.3 P200 BN200L4**	312
112	2338	1.6	13.1	36400			**A703_13.1 P200 BN200L4**	309
119	2192	2.8	12.3	38200			**A803_12.3 P200 BN200L4**	312
121	2158	1.6	12.1	35800			**A703_12.1 P200 BN200L4**	309
125	2094	1.7	23.5	35600			**A703_23.5 P200 BN200LA2**	309
137	1903	3.4	10.7	37100			**A803_10.7 P200 BN200L4**	312
143	1827	1.8	10.2	34600			**A703_10.2 P200 BN200L4**	309
148	1757	3.4	9.8	36500			**A803_9.8 P200 BN200L4**	312
155	1687	1.8	9.4	34000			**A703_9.4 P200 BN200L4**	309
176	1486	2.3	16.7	33100			**A703_16.7 P200 BN200LA2**	309
190	1371	2.3	15.4	32500			**A703_15.4 P200 BN200LA2**	309
224	1165	2.7	13.1	31300			**A703_13.1 P200 BN200LA2**	309
243	1075	2.7	12.1	30600			**A703_12.1 P200 BN200LA2**	309
287	910	3.2	10.2	29400			**A703_10.2 P200 BN200LA2**	309
310	840	3.2	9.4	28800			**A703_9.4 P200 BN200LA2**	309

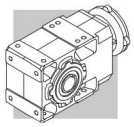

37 kW

n_2 min^{-1}	M_2 Nm	S	i	R_{n2} N	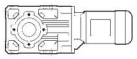		 IEC	
21.5	14945	0.9	68.8	63900			**A903_68.8 P225 BN225S4**	315
24.8	12959	1.1	59.6	63900			**A903_59.6 P225 BN225S4**	315
26.9	11962	1.2	55.0	63600			**A903_55.0 P225 BN225S4**	315
31	10499	1.3	48.3	63100			**A903_48.3 P225 BN225S4**	315
33	9692	1.4	44.6	62500			**A903_44.6 P225 BN225S4**	315
38	8436	1.7	38.8	61700			**A903_38.8 P225 BN225S4**	315
38	8369	0.9	38.5	41700			**A803_38.5 P225 BN225S4**	312
41	7787	1.8	35.8	61000			**A903_35.8 P225 BN225S4**	315
42	7725	0.9	35.5	41600			**A803_35.5 P225 BN225S4**	312
47	6847	2.0	31.5	59900			**A903_31.5 P225 BN225S4**	315
48	6647	1.0	30.6	41600			**A803_30.6 P225 BN225S4**	312
51	6321	2.1	29.1	59100			**A903_29.1 P225 BN225S4**	315
52	6135	1.1	28.2	41300			**A803_28.2 P225 BN225S4**	312
60	5326	1.3	24.5	40900			**A803_24.5 P225 BN225S4**	312
61	5241	2.5	24.1	57300			**A903_24.1 P225 BN225S4**	315
65	4916	1.3	22.6	40500			**A803_22.6 P225 BN225S4**	312
67	4837	2.5	22.3	56400			**A903_22.3 P225 BN225S4**	315
70	4565	2.7	21.0	55900			**A903_21.0 P225 BN225S4**	315
71	4554	1.4	20.9	40300			**A803_20.9 P225 BN225S4**	312
76	4214	2.7	19.4	54900			**A903_19.4 P225 BN225S4**	315
77	4204	1.4	19.3	39800			**A803_19.3 P225 BN225S4**	312
88	3668	3.2	16.9	53400			**A903_16.9 P225 BN225S4**	315
88	3639	1.8	16.7	39100			**A803_16.7 P225 BN225S4**	312
95	3386	3.2	15.6	52500			**A903_15.6 P225 BN225S4**	315
96	3359	1.8	15.5	38500			**A803_15.5 P225 BN225S4**	312
111	2890	2.3	13.3	37600			**A803_13.3 P225 BN225S4**	312
121	2667	2.3	12.3	37000			**A803_12.3 P225 BN225S4**	312
139	2316	2.8	10.7	36100			**A803_10.7 P225 BN225S4**	312
151	2137	2.8	9.8	35500			**A803_9.8 P225 BN225S4**	312

45 kW

n_2 min^{-1}	M_2 Nm	S	i	R_{n2} N	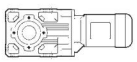		 IEC	
26.9	14549	1.0	55.0	58700			**A903_55.0 P225 BN225M4**	315
31	12769	1.1	48.3	58900			**A903_48.3 P225 BN225M4**	315
33	11787	1.2	44.6	58600			**A903_44.6 P225 BN225M4**	315
38	10260	1.4	38.8	58300			**A903_38.8 P225 BN225M4**	315
41	9471	1.5	35.8	57800			**A903_35.8 P225 BN225M4**	315
47	8328	1.7	31.5	57200			**A903_31.5 P225 BN225M4**	315
51	7687	1.7	29.1	56600			**A903_29.1 P225 BN225M4**	315
60	6477	1.0	24.5	38300			**A803_24.5 P225 BN225M4**	312
61	6374	2.1	24.1	55200			**A903_24.1 P225 BN225M4**	315
65	5979	1.0	22.6	38100			**A803_22.6 P225 BN225M4**	312
67	5883	2.1	22.3	54500			**A903_22.3 P225 BN225M4**	315
70	5552	2.2	21.0	54000			**A903_21.0 P225 BN225M4**	315
71	5539	1.2	20.9	38000			**A803_20.9 P225 BN225M4**	312
76	5125	2.3	19.4	53200			**A903_19.4 P225 BN225M4**	315
77	5112	1.2	19.3	37700			**A803_19.3 P225 BN225M4**	312

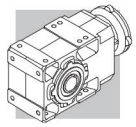

45 kW

n_2 min^{-1}	M_2 Nm	S	i	R_{n2} N	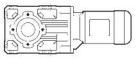			
88	4461	2.7	16.9	52000			**A903_16.9 P225 BN225M4**	315
88	4425	1.5	16.7	37300			**A803_16.7 P225 BN225M4**	312
95	4118	2.7	15.6	51100			**A903_15.6 P225 BN225M4**	315
96	4085	1.5	15.5	36900			**A803_15.5 P225 BN225M4**	312
108	3621	3.1	13.7	49900			**A903_13.7 P225 BN225M4**	315
111	3515	1.9	13.3	36200			**A803_13.3 P225 BN225M4**	312
117	3342	3.1	12.6	49000			**A903_12.6 P225 BN225M4**	315
121	3244	1.9	12.3	35700			**A803_12.3 P225 BN225M4**	312
139	2816	2.3	10.7	34900			**A803_10.7 P225 BN225M4**	312
141	2771	3.5	10.5	47100			**A903_10.5 P225 BN225M4**	315
151	2600	2.3	9.8	34400			**A803_9.8 P225 BN225M4**	312
153	2558	3.5	9.7	46200			**A903_9.7 P225 BN225M4**	315

55 kW

n_2 min^{-1}	M_2 Nm	S	i	R_{n2} N	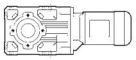			
33	14406	1.0	44.6	53900			**A903_44.6 P250 BN250M4**	315
38	12540	1.1	38.8	54100			**A903_38.8 P250 BN250M4**	315
41	11575	1.2	35.8	54000			**A903_35.8 P250 BN250M4**	315
47	10179	1.4	31.5	53800			**A903_31.5 P250 BN250M4**	315
51	9396	1.4	29.1	53400			**A903_29.1 P250 BN250M4**	315
61	7790	1.7	24.1	52600			**A903_24.1 P250 BN250M4**	315
67	7191	1.7	22.3	52000			**A903_22.3 P250 BN250M4**	315
70	6786	1.8	21.0	51700			**A903_21.0 P250 BN250M4**	315
76	6264	1.8	19.4	51100			**A903_19.4 P250 BN250M4**	315
88	5452	2.2	16.9	50100			**A903_16.9 P250 BN250M4**	315
95	5033	2.2	15.6	49400			**A903_15.6 P250 BN250M4**	315
108	4425	2.5	13.7	48400			**A903_13.7 P250 BN250M4**	315
117	4085	2.6	12.6	47600			**A903_12.6 P250 BN250M4**	315
141	3387	2.9	10.5	45900			**A903_10.5 P250 BN250M4**	315
153	3126	2.9	9.7	45100			**A903_9.7 P250 BN250M4**	315

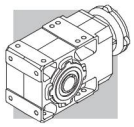

40 GEARBOX RATING CHARTS

A 10 — 150 Nm

	i	n_1 = 2800 min^{-1}					n_1 = 1400 min^{-1}					
		n_2 min^{-1}	M_{n2} Nm	P_{n1} kW	R_{n1} N	R_{n2} N	n_2 min^{-1}	M_{n2} Nm	P_{n1} kW	R_{n1} N	R_{n2} N	
A 10 2_5.5	5.5	512	73	4.2	—	1830	256	73	2.1	960	2460	
A 10 2_6.3	6.3	442	80	3.9	—	1900	221	80	2.0	830	2560	
A 10 2_7.2	7.2	388	92	4.0	—	1910	194	93	2.0	630	2600	
A 10 2_8.5	8.5	329	92	3.4	—	2060	164	93	1.7	720	2790	
A 10 2_9.6	9.6	291	102	3.3	—	2090	146	128	2.1	—	2650	
A 10 2_10.6	10.6	265	125	3.7	540	2010	133	150	2.2	810	2590	
A 10 2_12.3	12.3	228	110	2.8	—	2280	114	138	1.7	—	2880	
A 10 2_13.9	13.9	201	135	3.0	620	2220	101	150	1.7	1080	2960	
A 10 2_16.4	16.4	170	140	2.7	610	2370	85	150	1.4	1140	3200	
A 10 2_18.6	18.6	151	147	2.5	650	2460	75	150	1.3	1180	3380	
A 10 2_21.4	21.4	131	150	2.2	650	2610	66	150	1.1	1200	3600	
A 10 2_23.8	23.8	118	150	2.0	750	2750	59	150	0.98	1220	3780	277
A 10 2_25.5	25.5	110	150	1.8	750	2840	55	150	0.92	1220	3900	
A 10 2_28.6	28.6	98	150	1.6	830	3000	49	150	0.82	1250	4100	
A 10 2_32.2	32.2	87	150	1.5	880	3170	43	150	0.73	1270	4310	
A 10 2_35.1	35.1	80	150	1.3	880	3300	40	150	0.67	1270	4470	
A 10 2_40.9	40.9	69	150	1.1	910	3530	34	150	0.57	1300	4770	
A 10 2_45.4	45.4	62	150	1.0	910	3700	31	150	0.52	1300	4980	
A 10 2_51.3	51.3	55	150	0.91	910	3910	27.3	150	0.46	1290	5240	
A 10 2_58.6	58.6	48	150	0.80	920	4140	23.9	150	0.40	1300	5500	
A 10 2_65.9	65.9	42	150	0.71	920	4360	21.2	150	0.35	1300	5500	
A 10 2_76.4	76.4	37	150	0.61	930	4640	18.3	150	0.31	1300	5500	
A 10 2_91.6	91.6	31	130	0.44	1020	5160	15.3	130	0.22	1300	5500	

(—) Contact our technical service department advising radial load data (rotation direction, orientation, position)

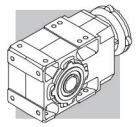

A 10 — 150 Nm

	i	n_1 = 900 min^{-1}					n_1 = 500 min^{-1}					
		n_2 min^{-1}	M_{n2} Nm	P_{n1} kW	R_{n1} N	R_{n2} N	n_2 min^{-1}	M_{n2} Nm	P_{n1} kW	R_{n1} N	R_{n2} N	
A 10 2_5.5	5.5	165	73	1.3	1300	2950	91	73	0.74	1300	3720	
A 10 2_6.3	6.3	142	80	1.3	1300	3070	79	80	0.70	1300	4100	
A 10 2_7.2	7.2	125	93	1.3	1160	3130	69	93	0.72	1300	3970	
A 10 2_8.5	8.5	106	95	1.1	1200	3330	59	110	0.72	1300	4100	
A 10 2_9.6	9.6	94	128	1.3	500	3230	52	128	0.74	1300	4160	
A 10 2_10.6	10.6	85	150	1.4	1300	3200	47	150	0.79	1300	4160	
A 10 2_12.3	12.3	73	150	1.2	180	3420	41	150	0.68	1030	4430	
A 10 2_13.9	13.9	65	150	1.1	1300	3630	36	150	0.60	1300	4680	
A 10 2_16.4	16.4	55	150	0.91	1300	3900	30	150	0.51	1300	5010	
A 10 2_18.6	18.6	48	150	0.81	1300	4120	26.9	150	0.45	1300	5270	
A 10 2_21.4	21.4	42	150	0.70	1300	4370	23.4	150	0.39	1300	5500	
A 10 2_23.8	23.8	38	150	0.63	1300	4570	21.0	150	0.35	1300	5500	277
A 10 2_25.5	25.5	35	150	0.59	1300	4710	19.6	150	0.33	1300	5500	
A 10 2_28.6	28.6	31	150	0.53	1300	4940	17.5	150	0.29	1300	5500	
A 10 2_32.2	32.2	28.0	150	0.47	1300	5190	15.5	150	0.26	1300	5500	
A 10 2_35.1	35.1	25.6	150	0.43	1300	5380	14.2	150	0.24	1300	5500	
A 10 2_40.9	40.9	22.0	150	0.37	1300	5500	12.2	150	0.20	1300	5500	
A 10 2_45.4	45.4	19.8	150	0.33	1300	5500	11.0	150	0.18	1300	5500	
A 10 2_51.3	51.3	17.6	150	0.29	1300	5500	9.8	150	0.16	1300	5500	
A 10 2_58.6	58.6	15.4	150	0.26	1300	5500	8.5	150	0.14	1300	5500	
A 10 2_65.9	65.9	13.7	150	0.23	1300	5500	7.6	150	0.13	1300	5500	
A 10 2_76.4	76.4	11.8	150	0.20	1300	5500	6.5	150	0.11	1300	5500	
A 10 2_91.6	91.6	9.8	130	0.14	1300	5500	5.5	130	0.08	1300	5500	

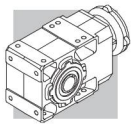

A 20 — 250 Nm

	i	n_1 = 2800 min^{-1}					n_1 = 1400 min^{-1}					
		n_2 min^{-1}	M_{n2} Nm	P_{n1} kW	R_{n1} N	R_{n2} N	n_2 min^{-1}	M_{n2} Nm	P_{n1} kW	R_{n1} N	R_{n2} N	
A 20 2_5.4	5.4	523	96	5.6	610	1910	262	121	3.5	770	2400	
A 20 2_6.5	6.5	428	107	5.1	490	2010	214	135	3.2	610	2530	
A 20 2_7.3	7.3	384	113	4.8	510	2070	192	143	3.1	630	2600	
A 20 2_8.4	8.4	334	116	4.3	510	2180	167	146	2.7	650	2750	
A 20 2_9.4	9.4	299	122	4.1	530	2260	149	154	2.6	660	2840	
A 20 2_10.3	10.3	271	183	5.5	650	1970	135	225	3.4	890	2520	
A 20 2_12.0	12.0	234	128	3.3	550	2280	117	161	2.1	690	3120	
A 20 2_14.1	14.1	199	199	4.4	750	2210	99	245	2.7	960	2820	
A 20 2_16.2	16.2	173	209	4.0	700	2310	87	250	2.4	1040	2990	
A 20 2_18.1	18.1	155	216	3.7	760	2400	77	250	2.2	1210	3170	
A 20 2_21.2	21.2	132	226	3.3	710	2540	66	250	1.8	1290	3430	
A 20 2_23.1	23.1	121	232	3.1	710	2620	61	250	1.7	1360	3580	
A 20 2_26.5	26.5	106	241	2.8	660	2750	53	250	1.5	1410	3820	
A 20 2_29.2	29.2	96	249	2.7	670	2850	48	250	1.3	1510	4000	
A 20 2_31.3	31.3	89	250	2.5	660	2940	45	250	1.2	1510	4130	
A 20 2_35.4	35.4	79	250	2.2	800	3140	40	250	1.1	1650	4380	
A 20 2_39.6	39.6	71	250	2.0	880	3320	35	250	0.98	1710	4600	
A 20 2_43.2	43.2	65	250	1.8	880	3460	32	250	0.90	1710	4790	
A 20 2_48.3	48.3	58	250	1.6	920	3650	29.0	250	0.81	1720	5030	281
A 20 2_53.7	53.7	52	250	1.5	920	3840	26.1	250	0.73	1720	5270	
A 20 2_63.1	63.1	44	245	1.2	1040	4180	22.2	245	0.61	1740	5680	
A 20 2_71.0	71.0	39	210	0.92	1360	4640	19.7	210	0.46	1790	6200	
A 20 2_79.9	79.9	35	210	0.82	1360	4880	17.5	210	0.41	1790	6200	
A 20 2_92.3	92.3	30	200	0.68	1380	5250	15.2	200	0.34	1810	6200	
A 20 3_109.2	109.2	25.6	165	0.49	1180	5900	12.8	205	0.30	1300	6200	
A 20 3_120.5	120.5	23.2	168	0.45	1130	6110	11.6	210	0.28	1300	6200	
A 20 3_129.1	129.1	21.7	175	0.44	1210	6200	10.8	215	0.27	1300	6200	
A 20 3_146.1	146.1	19.2	183	0.40	1160	6200	9.6	230	0.25	1300	6200	
A 20 3_163.4	163.4	17.1	190	0.37	1240	6200	8.6	235	0.23	1300	6200	
A 20 3_178.3	178.3	15.7	195	0.35	1200	6200	7.9	245	0.22	1300	6200	
A 20 3_199.2	199.2	14.1	200	0.32	1270	6200	7.0	250	0.20	1300	6200	
A 20 3_221.3	221.3	12.7	203	0.30	1240	6200	6.3	250	0.18	1300	6200	
A 20 3_260.5	260.5	10.8	214	0.26	1270	6200	5.4	250	0.15	1300	6200	
A 20 3_292.8	292.8	9.6	218	0.24	1300	6200	4.8	250	0.14	1300	6200	
A 20 3_329.4	329.4	8.5	221	0.22	1300	6200	4.3	250	0.12	1300	6200	
A 20 3_380.9	380.9	7.4	226	0.19	1300	6200	3.7	250	0.11	1300	6200	

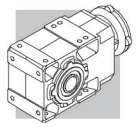

A 20 — 250 Nm

	i	n_1 = 900 min^{-1}					n_1 = 500 min^{-1}					
		n_2 min^{-1}	M_{n2} Nm	P_{n1} kW	R_{n1} N	R_{n2} N	n_2 min^{-1}	M_{n2} Nm	P_{n1} kW	R_{n1} N	R_{n2} N	
A 20 2_5.4	5.4	168	140	2.6	900	2780	93	170	1.8	1100	3390	
A 20 2_6.5	6.5	138	156	2.4	720	2930	76	190	1.6	860	3570	
A 20 2_7.3	7.3	123	165	2.3	740	3020	69	201	1.5	890	3670	
A 20 2_8.4	8.4	108	170	2.0	730	3180	60	206	1.4	910	3870	
A 20 2_9.4	9.4	96	179	1.9	760	3290	53	210	1.2	1090	4050	
A 20 2_10.3	10.3	87	250	2.4	1190	2990	48	250	1.3	2200	3980	
A 20 2_12.0	12.0	75	187	1.6	790	2990	42	210	0.98	1336	4510	
A 20 2_14.1	14.1	64	250	1.8	1610	3490	36	250	0.99	2200	4590	
A 20 2_16.2	16.2	56	250	1.6	1690	3730	31	250	0.86	2200	4880	
A 20 2_18.1	18.1	50	250	1.4	1860	3930	27.6	250	0.77	2200	5140	
A 20 2_21.2	21.2	42	250	1.2	1940	4230	23.6	250	0.66	2200	5500	
A 20 2_23.1	23.1	39	250	1.1	1970	4400	21.6	250	0.60	2200	5710	
A 20 2_26.5	26.5	34	250	0.95	1980	4680	18.9	250	0.53	2200	6050	
A 20 2_29.2	29.2	31	250	0.86	2000	4890	17.1	250	0.48	2200	6200	
A 20 2_31.3	31.3	28.7	250	0.80	2000	5040	16.0	250	0.44	2200	6200	
A 20 2_35.4	35.4	25.4	250	0.71	2020	5330	14.1	250	0.39	2200	6200	
A 20 2_39.6	39.6	22.7	250	0.63	2040	5590	12.6	250	0.35	2200	6200	
A 20 2_43.2	43.2	20.8	250	0.58	2040	5800	11.6	250	0.32	2200	6200	
A 20 2_48.3	48.3	18.6	250	0.52	2040	6080	10.4	250	0.29	2200	6200	281
A 20 2_53.7	53.7	16.8	250	0.47	2050	6200	9.3	250	0.26	2200	6200	
A 20 2_63.1	63.1	14.3	245	0.39	2060	6200	7.9	245	0.22	2200	6200	
A 20 2_71.0	71.0	12.7	210	0.30	2120	6200	7.0	210	0.16	2200	6200	
A 20 2_79.9	79.9	11.3	210	0.26	2120	6200	6.3	210	0.15	2200	6200	
A 20 2_92.3	92.3	9.7	200	0.22	2140	6200	5.4	200	0.12	2200	6200	
A 20 3_109.2	109.2	8.2	240	0.23	1300	6200	4.6	250	0.13	1300	6200	
A 20 3_120.5	120.5	7.5	245	0.21	1300	6200	4.1	250	0.12	1300	6200	
A 20 3_129.1	129.1	7.0	250	0.20	1300	6200	3.9	250	0.11	1300	6200	
A 20 3_146.1	146.1	6.2	250	0.18	1300	6200	3.4	250	0.10	1300	6200	
A 20 3_163.4	163.4	5.5	250	0.16	1300	6200	3.1	250	0.09	1300	6200	
A 20 3_178.3	178.3	5.0	250	0.15	1300	6200	2.8	250	0.08	1300	6200	
A 20 3_199.2	199.2	4.5	250	0.13	1300	6200	2.5	250	0.07	1300	6200	
A 20 3_221.3	221.3	4.1	250	0.12	1300	6200	2.3	250	0.06	1300	6200	
A 20 3_260.5	260.5	3.5	250	0.10	1300	6200	1.9	250	0.06	1300	6200	
A 20 3_292.8	292.8	3.1	250	0.09	1300	6200	1.7	250	0.05	1300	6200	
A 20 3_329.4	329.4	2.7	250	0.08	1300	6200	1.5	250	0.04	1300	6200	
A 20 3_380.9	380.9	2.4	250	0.07	1300	6200	1.3	250	0.04	1300	6200	

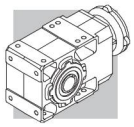

A 30 — 410 Nm

	i	n_1 = 2800 min^{-1}					n_1 = 1400 min^{-1}					
		n_2 min^{-1}	M_{n2} Nm	P_{n1} kW	R_{n1} N	R_{n2} N	n_2 min^{-1}	M_{n2} Nm	P_{n1} kW	R_{n1} N	R_{n2} N	
A 30 2_5.4	5.4	517	175	10.1	1130	2480	259	220	6.3	1430	3130	
A 30 2_6.4	6.4	437	185	9.0	1120	2630	218	230	5.6	1470	3330	
A 30 2_7.0	7.0	399	194	8.6	1140	2690	199	245	5.4	1430	3380	
A 30 2_8.5	8.5	331	200	7.4	1220	2900	165	250	4.6	1570	3660	
A 30 2_9.3	9.3	301	214	7.2	1140	2950	150	270	4.5	1440	3710	
A 30 2_10.5	10.5	268	278	8.3	1800	2770	134	340	5.1	2200	3550	
A 30 2_11.8	11.8	238	230	6.1	1130	3200	119	290	3.8	1420	4030	
A 30 2_13.6	13.6	206	301	6.9	1830	3030	103	370	4.3	2200	3870	
A 30 2_16.3	16.3	171	318	6.1	1830	3240	86	385	3.7	2200	4170	
A 30 2_18.0	18.0	156	327	5.7	1840	3350	78	400	3.5	2200	4290	
A 30 2_20.5	20.5	136	340	5.2	1830	3510	68	410	3.1	2200	4530	
A 30 2_22.8	22.8	123	351	4.8	1850	3640	62	410	2.8	2200	4770	
A 30 2_26.5	26.5	106	367	4.3	1840	3850	53	410	2.4	2200	5150	
A 30 2_29.3	29.3	96	378	4.0	1847	3980	48	410	2.2	2200	5400	
A 30 2_33.4	33.4	84	393	3.7	1840	4170	42	410	1.9	2200	5750	
A 30 2_36.6	36.6	76	404	3.4	1840	4310	38	410	1.7	2200	6010	
A 30 2_39.3	39.3	71	410	3.3	1810	4430	36	410	1.6	2200	6200	
A 30 2_43.4	43.4	64	410	2.9	1850	4660	32	410	1.5	2200	6490	
A 30 2_48.3	48.3	58	410	2.6	1860	4920	29.0	410	1.3	2200	6810	
A 30 2_52.7	52.7	53	410	2.4	1860	5130	26.6	410	1.2	2200	7080	285
A 30 2_59.4	59.4	47	400	2.1	1890	5500	23.6	400	1.0	2200	7530	
A 30 2_66.0	66.0	42	390	1.8	1900	5840	21.2	390	0.92	2200	7940	
A 30 2_76.5	76.5	37	350	1.4	1950	6480	18.3	350	0.71	2200	8690	
A 30 2_86.7	86.7	32	320	1.2	2000	7010	16.2	320	0.58	2200	9310	
A 30 2_97.5	97.5	28.7	300	0.96	2020	7480	14.4	300	0.48	2200	9600	
A 30 3_109.1	109.1	25.7	240	0.71	1300	8240	12.8	300	0.44	1300	9600	
A 30 3_120.5	120.5	23.2	243	0.65	1120	8540	11.6	300	0.40	1300	9600	
A 30 3_137.4	137.4	20.4	250	0.59	1300	8950	10.2	315	0.37	1300	9600	
A 30 3_150.7	150.7	18.6	261	0.56	1170	9210	9.3	330	0.35	1300	9600	
A 30 3_161.4	161.4	17.3	270	0.54	1300	9410	8.7	340	0.34	1300	9600	
A 30 3_178.5	178.5	15.7	274	0.49	1210	9600	7.8	345	0.31	1300	9600	
A 30 3_198.5	198.5	14.1	280	0.45	1300	9600	7.1	350	0.28	1300	9600	
A 30 3_216.6	216.6	12.9	287	0.43	1240	9600	6.5	360	0.27	1300	9600	
A 30 3_244.3	244.3	11.5	295	0.39	1300	9600	5.7	370	0.24	1300	9600	
A 30 3_271.5	271.5	10.3	301	0.36	1280	9600	5.2	380	0.23	1300	9600	
A 30 3_314.5	314.5	8.9	309	0.32	1300	9600	4.5	390	0.20	1300	9600	
A 30 3_356.3	356.3	7.9	320	0.29	1300	9600	3.9	370	0.17	1300	9600	
A 30 3_400.8	400.8	7.0	320	0.26	1300	9600	3.5	360	0.14	1300	9600	

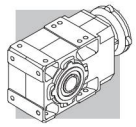

A 30 — 410 Nm

	i	n_1 = 900 min^{-1}					n_1 = 500 min^{-1}					
		n_2 min^{-1}	M_{n2} Nm	P_{n1} kW	R_{n1} N	R_{n2} N	n_2 min^{-1}	M_{n2} Nm	P_{n1} kW	R_{n1} N	R_{n2} N	
A 30 2_5.4	5.4	166	255	4.7	1660	3630	92	300	3.1	2200	4470	
A 30 2_6.4	6.4	140	270	4.2	1630	3830	78	300	2.6	2200	4830	
A 30 2_7.0	7.0	128	284	4.1	1650	3920	71	300	2.4	2200	5040	
A 30 2_8.5	8.5	106	290	3.4	1810	4240	59	300	2.0	2200	5470	
A 30 2_9.3	9.3	97	300	3.2	1900	4380	54	300	1.8	2200	5710	
A 30 2_10.5	10.5	86	391	3.7	2200	4130	48	410	2.2	2200	5400	
A 30 2_11.8	11.8	76	300	2.6	2200	4880	42	300	1.4	2200	6320	
A 30 2_13.6	13.6	66	410	3.0	2200	4600	37	410	1.7	2200	6110	
A 30 2_16.3	16.3	55	410	2.5	2200	5044	31	410	1.4	2200	6650	
A 30 2_18.0	18.0	50	410	2.3	2200	5280	27.8	410	1.3	2200	6940	
A 30 2_20.5	20.5	44	410	2.0	2200	5630	24.3	410	1.1	2200	7360	
A 30 2_22.8	22.8	40	410	1.8	2200	5910	22.0	410	1.0	2200	7700	
A 30 2_26.5	26.5	34	410	1.5	2200	6340	18.8	410	0.86	2200	8230	
A 30 2_29.3	29.3	31	410	1.4	2200	6640	17.1	410	0.78	2200	8590	
A 30 2_33.4	33.4	26.9	410	1.2	2200	7040	15.0	410	0.68	2200	9080	
A 30 2_36.6	36.6	24.6	410	1.1	2200	7340	13.6	410	0.62	2200	9440	
A 30 2_39.3	39.3	22.9	410	1.0	2200	7560	12.7	410	0.58	2200	9600	
A 30 2_43.4	43.4	20.7	410	0.95	2200	7900	11.5	410	0.53	2200	9600	
A 30 2_48.3	48.3	18.6	410	0.85	2200	8270	10.4	410	0.47	2200	9600	
A 30 2_52.7	52.7	17.1	410	0.78	2200	8590	9.5	410	0.43	2200	9600	285
A 30 2_59.4	59.4	15.1	400	0.67	2200	9090	8.4	400	0.37	2200	9600	
A 30 2_66.0	66.0	13.6	390	0.59	2200	9560	7.6	390	0.33	2200	9600	
A 30 2_76.5	76.5	11.8	350	0.46	2200	9600	6.5	350	0.25	2200	9600	
A 30 2_86.7	86.7	10.4	320	0.37	2200	9600	5.8	320	0.21	2200	9600	
A 30 2_97.5	97.5	9.2	300	0.31	2200	9600	5.1	300	0.17	2200	9600	
A 30 3_109.1	109.1	8.3	350	0.33	1300	9600	4.6	370	0.20	1300	9600	
A 30 3_120.5	120.5	7.5	354	0.30	1300	9600	4.2	410	0.20	1300	9600	
A 30 3_137.4	137.4	6.5	370	0.28	1300	9600	3.6	410	0.17	1300	9600	
A 30 3_150.7	150.7	6.0	381	0.26	1300	9600	3.3	410	0.16	1300	9600	
A 30 3_161.4	161.4	5.6	390	0.25	1300	9600	3.1	410	0.15	1300	9600	
A 30 3_178.5	178.5	5.0	400	0.23	1300	9600	2.8	410	0.13	1300	9600	
A 30 3_198.5	198.5	4.5	410	0.21	1300	9600	2.5	410	0.12	1300	9600	
A 30 3_216.6	216.6	4.2	410	0.20	1300	9600	2.3	410	0.11	1300	9600	
A 30 3_244.3	244.3	3.7	410	0.17	1300	9600	2.0	410	0.10	1300	9600	
A 30 3_271.5	271.5	3.3	410	0.16	1300	9600	1.8	410	0.09	1300	9600	
A 30 3_314.5	314.5	2.9	410	0.13	1300	9600	1.6	410	0.07	1300	9600	
A 30 3_356.3	356.3	2.5	380	0.11	1300	9600	1.4	380	0.06	1300	9600	
A 30 3_400.8	400.8	2.2	360	0.09	1300	9600	1.2	360	0.05	1300	9600	

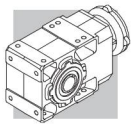

A 35 — 600 Nm

	i	n_1 = 2800 min^{-1}					n_1 = 1400 min^{-1}					
		n_2 min^{-1}	M_{n2} Nm	P_{n1} kW	R_{n1} N	R_{n2} N	n_2 min^{-1}	M_{n2} Nm	P_{n1} kW	R_{n1} N	R_{n2} N	
A 35 2_5.4	5.4	517	246	14.2	1420	4000	259	310	8.9	1790	5050	
A 35 2_6.4	6.4	437	262	12.7	1420	4230	218	330	8.0	1790	5330	
A 35 2_7.0	7.0	399	278	12.3	1410	4320	199	350	7.8	1790	5440	
A 35 2_8.5	8.5	331	286	10.5	1450	4650	165	360	6.6	1830	5850	
A 35 2_9.3	9.3	301	302	10.1	1450	4760	150	380	6.4	1830	6000	
A 35 2_10.6	10.6	263	310	9.1	1440	5010	132	390	5.7	1830	6310	
A 35 2_11.8	11.8	238	317	8.4	1480	5200	119	400	5.3	1860	6550	
A 35 2_13.1	13.1	214	400	10.9	1630	4470	107	550	6.6	2100	5780	
A 35 2_15.5	15.5	181	430	10.0	1620	4670	90	570	5.7	2120	6190	
A 35 2_17.0	17.0	165	465	9.7	1620	4730	83	600	5.5	2130	6310	
A 35 2_20.4	20.4	137	500	8.4	1630	5080	69	600	4.6	2170	6930	
A 35 2_22.5	22.5	125	540	7.8	1660	5290	62	600	4.2	2200	7260	
A 35 2_25.7	25.7	109	585	7.1	1640	5540	55	600	3.6	2200	7740	
A 35 2_28.4	28.4	98	600	6.6	1660	5760	49	600	3.3	2200	8130	
A 35 2_33.2	33.2	84	600	5.6	910	6240	42	600	2.8	2200	8730	
A 35 2_36.6	36.6	76	600	5.1	1080	6560	38	600	2.6	2200	9140	
A 35 2_41.8	41.8	67	600	4.5	1140	7010	34	600	2.2	2200	9700	
A 35 2_45.8	45.8	61	600	4.1	1260	7330	31	600	2.0	2200	10100	
A 35 2_49.1	49.1	57	600	3.8	1260	7580	28.5	600	1.9	2200	10400	
A 35 2_54.3	54.3	52	600	3.4	1360	7950	25.8	600	1.7	2200	10900	289
A 35 2_60.4	60.4	46	600	3.1	1470	8360	23.2	600	1.6	2200	11400	
A 35 2_65.8	65.8	43	600	2.8	1470	8700	21.3	600	1.4	2200	11800	
A 35 2_74.3	74.3	38	600	2.5	1560	9200	18.8	600	1.3	2200	12000	
A 35 2_82.5	82.5	34	600	2.3	1560	9650	17.0	600	1.1	2200	12000	
A 35 2_95.6	95.6	29.3	540	1.8	1860	10600	14.6	540	0.88	2200	12000	
A 35 3_105.5	105.5	26.5	430	1.3	550	12000	13.3	525	0.80	780	12000	
A 35 3_116.9	116.9	24.0	455	1.3	650	12000	12.0	560	0.77	870	12000	
A 35 3_136.3	136.3	20.5	470	1.1	870	12000	10.3	575	0.68	1110	12000	
A 35 3_150.6	150.6	18.6	495	1.1	900	12000	9.3	600	0.64	1160	12000	
A 35 3_171.8	171.8	16.3	505	0.95	960	12000	8.1	600	0.56	1250	12000	
A 35 3_188.3	188.3	14.9	525	0.90	990	12000	7.4	600	0.51	1300	12000	
A 35 3_201.8	201.8	13.9	525	0.84	1020	12000	6.9	600	0.48	1300	12000	
A 35 3_223.2	223.2	12.5	545	0.79	1050	12000	6.3	600	0.43	1300	12000	
A 35 3_248.1	248.1	11.3	565	0.73	1080	12000	5.6	600	0.39	1300	12000	
A 35 3_270.7	270.7	10.3	570	0.68	1110	12000	5.2	600	0.36	1300	12000	
A 35 3_305.4	305.4	9.2	585	0.62	1140	12000	4.6	600	0.32	1300	12000	
A 35 3_339.3	339.3	8.3	520	0.49	1210	12000	4.1	520	0.25	1300	12000	
A 35 3_393.2	393.2	7.1	465	0.38	1260	12000	3.6	465	0.19	1300	12000	

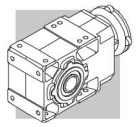

A 35 — 600 Nm

	i	n_1 = 900 min^{-1}					n_1 = 500 min^{-1}					
		n_2 min^{-1}	M_{n2} Nm	P_{n1} kW	R_{n1} N	R_{n2} N	n_2 min^{-1}	M_{n2} Nm	P_{n1} kW	R_{n1} N	R_{n2} N	
A 35 2_5.4	5.4	166	340	6.3	2150	5940	92	340	3.5	2200	7600	
A 35 2_6.4	6.4	140	350	5.5	2190	6340	78	350	3.0	2200	8090	
A 35 2_7.0	7.0	128	370	5.3	2200	6490	71	370	2.9	2200	8290	
A 35 2_8.5	8.5	106	380	4.5	2200	6970	59	380	2.5	2200	8890	
A 35 2_9.3	9.3	97	400	4.3	2200	7160	54	400	2.4	2200	9140	
A 35 2_10.6	10.6	85	400	3.8	2200	7570	47	400	2.1	2200	9650	
A 35 2_11.8	11.8	76	400	3.4	2200	7910	42	400	1.9	2200	10100	
A 35 2_13.1	13.1	69	600	4.6	2200	6910	38	600	2.6	2200	9140	
A 35 2_15.5	15.5	58	600	3.9	2090	7510	32	600	2.2	2200	9860	
A 35 2_17.0	17.0	53	600	3.5	2200	7840	29.5	600	2.0	2200	10300	
A 35 2_20.4	20.4	44	600	2.9	2200	8560	24.5	600	1.6	2200	11100	
A 35 2_22.5	22.5	40	600	2.7	2200	8950	22.2	600	1.5	2200	11600	
A 35 2_25.7	25.7	35	600	2.3	2200	9500	19.5	600	1.3	2200	12000	
A 35 2_28.4	28.4	32	600	2.1	2200	9950	17.6	600	1.2	2200	12000	
A 35 2_33.2	33.2	27.1	600	1.8	2200	10700	15.1	600	1.0	2200	12000	
A 35 2_36.6	36.6	24.6	600	1.6	2200	11100	13.7	600	0.91	2200	12000	
A 35 2_41.8	41.8	21.5	600	1.4	2200	11800	12.0	600	0.80	2200	12000	
A 35 2_45.8	45.8	19.6	600	1.3	2200	12000	10.9	600	0.73	2200	12000	
A 35 2_49.1	49.1	18.3	600	1.2	2200	12000	10.2	600	0.68	2200	12000	
A 35 2_54.3	54.3	16.6	600	1.1	2200	12000	9.2	600	0.62	2200	12000	289
A 35 2_60.4	60.4	14.9	600	1.0	2200	12000	8.3	600	0.55	2200	12000	
A 35 2_65.8	65.8	13.7	600	0.91	2200	12000	7.6	600	0.51	2200	12000	
A 35 2_74.3	74.3	12.1	600	0.81	2200	12000	6.7	600	0.45	2200	12000	
A 35 2_82.5	82.5	10.9	600	0.73	2200	12000	6.1	600	0.40	2200	12000	
A 35 2_95.6	95.6	9.4	540	0.57	2200	12000	5.2	540	0.31	2200	12000	
A 35 3_105.5	105.5	8.5	600	0.59	940	12000	4.7	600	0.33	1300	12000	
A 35 3_116.9	116.9	7.7	600	0.53	1230	12000	4.3	600	0.30	1300	12000	
A 35 3_136.3	136.3	6.6	600	0.46	1300	12000	3.7	600	0.25	1300	12000	
A 35 3_150.6	150.6	6.0	600	0.41	1300	12000	3.3	600	0.23	1300	12000	
A 35 3_171.8	171.8	5.2	600	0.36	1300	12000	2.9	600	0.20	1300	12000	
A 35 3_188.3	188.3	4.8	600	0.33	1300	12000	2.7	600	0.18	1300	12000	
A 35 3_201.8	201.8	4.5	600	0.31	1300	12000	2.5	600	0.17	1300	12000	
A 35 3_223.2	223.2	4.0	600	0.28	1300	12000	2.2	600	0.15	1300	12000	
A 35 3_248.1	248.1	3.6	600	0.25	1300	12000	2.0	600	0.14	1300	12000	
A 35 3_270.7	270.7	3.3	600	0.23	1300	12000	1.8	600	0.13	1300	12000	
A 35 3_305.4	305.4	2.9	600	0.20	1300	12000	1.6	600	0.11	1300	12000	
A 35 3_339.3	339.3	2.7	520	0.16	1300	12000	1.5	520	0.09	1300	12000	
A 35 3_393.2	393.2	2.3	465	0.12	1300	12000	1.3	465	0.07	1300	12000	

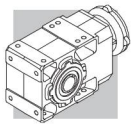

A 41 — 850 Nm

	i	n_1 = 2800 min^{-1}					n_1 = 1400 min^{-1}					
		n_2 min^{-1}	M_{n2} Nm	P_{n1} kW	R_{n1} N	R_{n2} N	n_2 min^{-1}	M_{n2} Nm	P_{n1} kW	R_{n1} N	R_{n2} N	
A 41 2_5.2	5.2	534	450	27	1790	4350	267	550	16.4	2450	5560	
A 41 2_7.1	7.1	393	490	22	1890	4850	197	550	12.0	2670	6430	
A 41 2_8.3	8.3	336	510	19.1	1900	5140	168	550	10.3	2750	6920	
A 41 2_9.2	9.2	304	530	18.0	1980	5300	152	550	9.3	2860	7240	
A 41 2_10.1	10.1	276	435	13.4	2680	6030	138	535	8.2	3390	7650	
A 41 2_11.7	11.7	238	550	14.6	2050	5870	119	550	7.3	2950	8070	
A 41 2_13.8	13.8	204	480	10.9	2690	6680	102	585	6.6	3430	8510	
A 41 2_16.1	16.1	174	500	9.7	2700	7070	87	610	5.9	3430	9000	
A 41 2_17.8	17.8	158	515	9.0	2730	7310	79	630	5.5	3470	9300	
A 41 2_22.7	22.7	123	550	7.6	2730	7970	62	680	4.7	3460	10100	
A 41 2_28.3	28.3	99	595	6.6	2670	8570	49	730	4.0	3450	10900	
A 41 2_35.9	35.9	78	635	5.5	2590	9320	39	780	3.4	3410	11800	
A 41 2_45.1	45.1	62	680	4.7	2500	10100	31	830	2.9	3330	12800	
A 41 2_48.3	48.3	58	690	4.5	2430	10300	29.0	850	2.7	3200	13100	
A 41 2_53.1	53.1	53	700	4.1	2470	10700	26.3	850	2.5	3330	13700	
A 41 2_58.8	58.8	48	730	3.9	2390	11100	23.8	850	2.3	3460	14300	293
A 41 2_64.2	64.2	44	740	3.6	2320	11500	21.8	850	2.1	3460	14800	
A 41 2_71.3	71.3	39	780	3.4	2120	11800	19.6	850	1.9	3470	15000	
A 41 2_79.2	79.2	35	800	3.1	1990	12300	17.7	800	1.6	3500	15000	
A 41 3_92.8	92.8	30	650	2.3	270	14000	15.1	800	1.4	430	15000	
A 41 3_115.9	115.9	24.2	800	2.2	310	14600	12.1	850	1.2	980	15000	
A 41 3_146.9	146.9	19.1	850	1.9	790	15000	9.5	850	0.93	1640	15000	
A 41 3_184.4	184.4	15.2	850	1.5	1290	15000	7.6	850	0.74	1770	15000	
A 41 3_197.5	197.5	14.2	850	1.4	1360	15000	7.1	850	0.69	1790	15000	
A 41 3_217.4	217.4	12.9	850	1.3	1390	15000	6.4	850	0.63	1820	15000	
A 41 3_240.6	240.6	11.6	850	1.1	1410	15000	5.8	850	0.57	1840	15000	
A 41 3_262.5	262.5	10.7	850	1.0	1430	15000	5.3	850	0.52	1860	15000	
A 41 3_291.7	291.7	9.6	850	0.94	1450	15000	4.8	850	0.47	1880	15000	
A 41 3_324.2	324.2	8.6	850	0.84	1470	15000	4.3	850	0.42	1900	15000	
A 41 3_376.8	376.8	7.4	850	0.73	1500	15000	3.7	850	0.36	1930	15000	

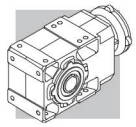

A 41 — 850 Nm

	i	n_1 = 900 min^{-1}					n_1 = 500 min^{-1}					
		n_2 min^{-1}	M_{n2} Nm	P_{n1} kW	R_{n1} N	R_{n2} N	n_2 min^{-1}	M_{n2} Nm	P_{n1} kW	R_{n1} N	R_{n2} N	
A 41 2_5.2	5.2	172	550	10.5	3140	6850	95	550	5.8	3500	8900	
A 41 2_7.1	7.1	126	550	7.7	3360	7870	70	550	4.3	3500	10100	
A 41 2_8.3	8.3	108	550	6.6	3440	8430	60	550	3.7	3500	10800	
A 41 2_9.2	9.2	98	550	6.0	3500	8800	54	550	3.3	3500	11300	
A 41 2_10.1	10.1	89	610	6.0	3500	8920	49	730	4.0	3500	10900	
A 41 2_11.7	11.7	77	550	4.7	3500	9760	43	550	2.6	3500	12400	
A 41 2_13.8	13.8	65	670	4.9	3500	9900	36	800	3.2	3500	12100	
A 41 2_16.1	16.1	56	700	4.4	3500	10500	31	830	2.9	3500	12800	
A 41 2_17.8	17.8	51	720	4.1	3500	10800	28.1	850	2.7	3500	13300	
A 41 2_22.7	22.7	40	780	3.4	3500	11700	22.0	850	2.1	3500	14800	
A 41 2_28.3	28.3	32	830	2.9	3500	12700	17.7	850	1.7	3500	15000	
A 41 2_35.9	35.9	25.1	850	2.4	3500	14000	13.9	850	1.3	3500	15000	
A 41 2_45.1	45.1	20.0	850	1.9	3500	15000	11.1	850	1.1	3500	15000	
A 41 2_48.3	48.3	18.6	850	1.8	3500	15000	10.4	850	0.98	3500	15000	
A 41 2_53.1	53.1	16.9	850	1.6	3500	15000	9.4	850	0.89	3500	15000	
A 41 2_58.8	58.8	15.3	850	1.4	3500	15000	8.5	850	0.81	3500	15000	293
A 41 2_64.2	64.2	14.0	850	1.3	3300	15000	7.8	850	0.74	3500	15000	
A 41 2_71.3	71.3	12.6	850	1.2	3500	15000	7.0	850	0.66	3500	15000	
A 41 2_79.2	79.2	11.4	800	1.0	3500	15000	6.3	800	0.56	3500	15000	
A 41 3_92.8	92.8	9.7	800	0.89	1080	15000	5.4	800	0.50	2110	15000	
A 41 3_115.9	115.9	7.8	850	0.76	1630	15000	4.3	850	0.42	2200	15000	
A 41 3_146.9	146.9	6.1	850	0.60	2020	15000	3.4	850	0.33	2200	15000	
A 41 3_184.4	184.4	4.9	850	0.48	2100	15000	2.7	850	0.27	2200	15000	
A 41 3_197.5	197.5	4.6	850	0.45	2120	15000	2.5	850	0.25	2200	15000	
A 41 3_217.4	217.4	4.1	850	0.40	2150	15000	2.3	850	0.22	2200	15000	
A 41 3_240.6	240.6	3.7	850	0.37	2170	15000	2.1	850	0.20	2200	15000	
A 41 3_262.5	262.5	3.4	850	0.34	2190	15000	1.9	850	0.19	2200	15000	
A 41 3_291.7	291.7	3.1	850	0.30	2200	15000	1.7	850	0.17	2200	15000	
A 41 3_324.2	324.2	2.8	850	0.27	2200	15000	1.5	850	0.15	2200	15000	
A 41 3_376.8	376.8	2.4	850	0.23	2200	15000	1.3	850	0.13	2200	15000	

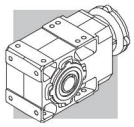

A 50 — 1500 Nm

	i	n_1 = 2800 min^{-1}					n_1 = 1400 min^{-1}					
		n_2 min^{-1}	M_{n2} Nm	P_{n1} kW	R_{n1} N	R_{n2} N	n_2 min^{-1}	M_{n2} Nm	P_{n1} kW	R_{n1} N	R_{n2} N	
A 50 2_7.7	7.7	362	550	22	2300	7920	181	700	14.1	2890	9960	
A 50 2_9.7	9.7	288	600	19.2	2330	8530	144	750	12.0	2950	10800	
A 50 2_13.1	13.1	214	600	14.3	2460	9600	107	750	8.9	3110	12100	
A 50 2_16.6	16.6	169	640	12.0	2490	10400	84	800	7.5	3150	13100	
A 50 2_20.9	20.9	134	640	9.5	2540	11400	67	800	6.0	3210	14400	
A 50 3_24.0	24.0	116	1150	15.4	1850	7020	58	1500	10.0	2100	8540	
A 50 3_26.4	26.4	106	1200	14.6	2100	7170	53	1500	9.1	2690	9100	
A 50 3_32.4	32.4	86	1290	12.8	1800	4630	43	1500	7.5	2760	10400	
A 50 3_35.6	35.6	79	1340	12.1	2080	7830	39	1500	6.8	3290	11000	
A 50 3_40.9	40.9	68	1415	11.1	1740	8130	34	1500	5.9	3220	11900	
A 50 3_45.0	45.0	62	1470	10.5	2030	8340	31	1500	5.4	3440	12600	
A 50 3_51.7	51.7	54	1500	9.4	1680	8970	27.1	1500	4.7	3400	13600	
A 50 3_56.8	56.8	49	1500	8.5	2150	9540	24.6	1500	4.3	3480	14400	
A 50 3_63.9	63.9	44	1500	7.6	1900	10300	21.9	1500	3.8	3450	15300	
A 50 3_70.2	70.2	40	1500	6.9	2350	10900	19.9	1500	3.4	3500	16100	
A 50 3_81.5	81.5	34	1500	5.9	2170	11900	17.2	1500	3.0	3500	17300	
A 50 3_89.5	89.5	31	1500	5.4	2590	12600	15.6	1500	2.7	3500	18200	
A 50 3_99.5	99.5	28.1	1500	4.9	2260	13400	14.1	1500	2.4	3500	19200	
A 50 3_109.4	109.4	25.6	1500	4.4	2680	14100	12.8	1500	2.2	3500	20000	
A 50 3_118.0	118.0	23.7	1500	4.1	2390	14700	11.9	1500	2.0	3500	20000	297
A 50 3_129.7	129.7	21.6	1500	3.7	2720	15400	10.8	1500	1.9	3500	20000	
A 50 3_140.6	140.6	19.9	1500	3.4	2440	16100	10.0	1500	1.7	3500	20000	
A 50 3_154.6	154.6	18.1	1500	3.1	2730	16900	9.1	1500	1.6	3500	20000	
A 50 3_173.4	173.4	16.2	1500	2.8	2480	17900	8.1	1500	1.4	3500	20000	
A 50 3_190.6	190.6	14.7	1500	2.5	2740	18800	7.3	1500	1.3	3500	20000	
A 50 4_211.0	211.0	13.3	1500	2.3	1930	20000	6.6	1500	1.2	2200	20000	
A 50 4_232.0	232.0	12.1	1500	2.1	1970	20000	6.0	1500	1.1	2200	20000	
A 50 4_260.9	260.9	10.7	1500	1.9	2010	20000	5.4	1500	0.95	2200	20000	
A 50 4_286.8	286.8	9.8	1500	1.7	2040	20000	4.9	1500	0.86	2200	20000	
A 50 4_332.6	332.6	8.4	1500	1.5	2080	20000	4.2	1500	0.74	2200	20000	
A 50 4_365.6	365.6	7.7	1500	1.4	2100	20000	3.8	1500	0.68	2200	20000	
A 50 4_406.4	406.4	6.9	1500	1.2	2130	20000	3.4	1500	0.61	2200	20000	
A 50 4_446.8	446.8	6.3	1500	1.1	2140	20000	3.1	1500	0.55	2200	20000	
A 50 4_481.6	481.6	5.8	1500	1.0	2160	20000	2.9	1500	0.51	2200	20000	
A 50 4_529.5	529.5	5.3	1500	0.93	2170	20000	2.6	1500	0.47	2200	20000	
A 50 4_574.2	574.2	4.9	1500	0.86	2190	20000	2.4	1500	0.43	2200	20000	
A 50 4_631.2	631.2	4.4	1500	0.78	2200	20000	2.2	1500	0.39	2200	20000	
A 50 4_707.9	707.9	4.0	1500	0.70	2200	20000	2.0	1500	0.35	2200	20000	
A 50 4_778.2	778.2	3.6	1500	0.63	2200	20000	1.8	1500	0.32	2200	20000	

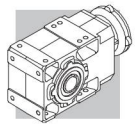

A 50 — 1500 Nm

	i	n_1 = 900 min^{-1}					n_1 = 500 min^{-1}					
		n_2 min^{-1}	M_{n2} Nm	P_{n1} kW	R_{n1} N	R_{n2} N	n_2 min^{-1}	M_{n2} Nm	P_{n1} kW	R_{n1} N	R_{n2} N	
A 50 2_7.7	7.7	116	770	10.0	3430	11700	65	900	6.5	3500	14300	
A 50 2_9.7	9.7	92	830	8.5	3490	12600	51	1000	5.7	3500	15300	
A 50 2_13.1	13.1	69	830	6.3	3500	14200	38	1000	4.2	3500	17300	
A 50 2_16.6	16.6	54	880	5.3	3500	15400	30	1000	3.4	3500	18900	
A 50 2_20.9	20.9	43	880	4.2	3500	16800	23.9	1000	2.7	3500	20000	
A 50 3_24.0	24.0	37	1500	6.5	3480	11300	20.8	1500	3.6	3500	15700	
A 50 3_26.4	26.4	34	1500	5.9	3500	12000	18.9	1500	3.3	3500	16500	
A 50 3_32.4	32.4	27.8	1500	4.8	3500	13400	15.4	1500	2.7	3500	18300	
A 50 3_35.6	35.6	25.3	1500	4.4	3500	14200	14.0	1500	2.4	3500	19200	
A 50 3_40.9	40.9	22.0	1500	3.8	3500	15300	12.2	1500	2.1	3500	20000	
A 50 3_45.0	45.0	20.0	1500	3.5	3500	16000	11.1	1500	1.9	3500	20000	
A 50 3_51.7	51.7	17.4	1500	3.0	3450	17200	9.7	1500	1.7	3500	20000	
A 50 3_56.8	56.8	15.8	1500	2.7	3500	18100	8.8	1500	1.5	3500	20000	
A 50 3_63.9	63.9	14.1	1500	2.4	3500	19200	7.8	1500	1.4	3500	20000	
A 50 3_70.2	70.2	12.8	1500	2.2	3500	20000	7.1	1500	1.2	3500	20000	
A 50 3_81.5	81.5	11.0	1500	1.9	3500	20000	6.1	1500	1.1	3500	20000	
A 50 3_89.5	89.5	10.1	1500	1.7	3500	20000	5.6	1500	0.96	3500	20000	
A 50 3_99.5	99.5	9.0	1500	1.6	3500	20000	5.0	1500	0.87	3500	20000	
A 50 3_109.4	109.4	8.2	1500	1.4	3500	20000	4.6	1500	0.79	3500	20000	
A 50 3_118.0	118.0	7.6	1500	1.3	3500	20000	4.2	1500	0.73	3500	20000	297
A 50 3_129.7	129.7	6.9	1500	1.2	3500	20000	3.9	1500	0.67	3500	20000	
A 50 3_140.6	140.6	6.4	1500	1.1	3500	20000	3.6	1500	0.61	3500	20000	
A 50 3_154.6	154.6	5.8	1500	1.0	3500	20000	3.2	1500	0.56	3500	20000	
A 50 3_173.4	173.4	5.2	1500	0.90	3500	20000	2.9	1500	0.50	3500	20000	
A 50 3_190.6	190.6	4.7	1500	0.82	3500	20000	2.6	1500	0.45	3500	20000	
A 50 4_211.0	211.0	4.3	1500	0.75	2200	20000	2.4	1500	0.42	2200	20000	
A 50 4_232.0	232.0	3.9	1500	0.68	2200	20000	2.2	1500	0.38	2200	20000	
A 50 4_260.9	260.9	3.4	1500	0.61	2200	20000	1.9	1500	0.34	2200	20000	
A 50 4_286.8	286.8	3.1	1500	0.55	2200	20000	1.7	1500	0.31	2200	20000	
A 50 4_332.6	332.6	2.7	1500	0.48	2200	20000	1.5	1500	0.27	2200	20000	
A 50 4_365.6	365.6	2.5	1500	0.43	2200	20000	1.4	1500	0.24	2200	20000	
A 50 4_406.4	406.4	2.2	1500	0.39	2200	20000	1.2	1500	0.22	2200	20000	
A 50 4_446.8	446.8	2.0	1500	0.36	2200	20000	1.1	1500	0.20	2200	20000	
A 50 4_481.6	481.6	1.9	1500	0.33	2200	20000	1.0	1500	0.18	2200	20000	
A 50 4_529.5	529.5	1.7	1500	0.30	2200	20000	0.94	1500	0.17	2200	20000	
A 50 4_574.2	574.2	1.6	1500	0.28	2200	20000	0.87	1500	0.15	2200	20000	
A 50 4_631.2	631.2	1.4	1500	0.25	2200	20000	0.79	1500	0.14	2200	20000	
A 50 4_707.9	707.9	1.3	1500	0.22	2200	20000	0.71	1500	0.12	2200	20000	
A 50 4_778.2	778.2	1.2	1500	0.20	2200	20000	0.64	1500	0.11	2200	20000	

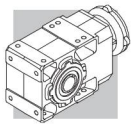

A 55 — 2000 Nm

	i	n_1 = 2800 min^{-1}					n_1 = 1400 min^{-1}					
		n_2 min^{-1}	M_{n2} Nm	P_{n1} kW	R_{n1} N	R_{n2} N	n_2 min^{-1}	M_{n2} Nm	P_{n1} kW	R_{n1} N	R_{n2} N	
A 55 2_4.9	4.9	571	760	48	1320	15100	286	900	28	2150	18700	
A 55 2_6.4	6.4	438	800	39	1950	16400	219	950	23	2860	20300	
A 55 2_8.5	8.5	329	800	30	2810	18000	165	950	17.5	3500	22200	
A 55 2_10.4	10.4	269	840	25	2900	19100	135	1000	15.1	3500	23600	
A 55 2_13.1	13.1	214	840	20	3230	20600	107	1000	11.9	3500	25500	
A 55 2_15.7	15.7	178	840	16.7	3440	21900	89	1000	9.9	3500	27000	
A 55 2_19.2	19.2	146	925	15.0	3160	23200	73	1100	8.9	3500	28600	
A 55 3_23.8	23.8	118	1600	22	2050	21000	59	1950	13.2	2640	26000	
A 55 3_29.9	29.9	94	1700	18.3	2110	22500	47	2000	10.8	2770	28200	
A 55 3_40.3	40.3	69	1850	14.8	2150	24800	35	2000	8.0	2930	30000	
A 55 3_51.0	51.0	55	2000	12.6	2170	26500	27.5	2000	6.3	3050	30000	
A 55 3_64.3	64.3	44	2000	10.0	2230	29000	21.8	2000	5.0	3110	30000	
A 55 3_79.5	79.5	35	2000	8.1	1040	30000	17.6	2000	4.1	2820	30000	
A 55 3_101.4	101.4	27.6	2000	6.4	1340	30000	13.8	2000	3.2	3130	30000	
A 55 3_123.9	123.9	22.6	2000	5.2	1450	30000	11.3	2000	2.6	3230	30000	301
A 55 3_132.7	132.7	21.1	2000	4.9	1450	30000	10.6	2000	2.4	3240	30000	
A 55 3_146.8	146.8	19.1	2000	4.4	1610	30000	9.5	2000	2.2	3290	30000	
A 55 3_160.4	160.4	17.5	2000	4.0	1660	30000	8.7	2000	2.0	3300	30000	
A 55 3_175.0	175.0	16.0	2000	3.7	1660	30000	8.0	2000	1.8	3300	30000	
A 55 3_194.2	194.2	14.4	2000	3.3	1710	30000	7.2	2000	1.7	3310	30000	
A 55 4_208.1	208.1	13.5	1600	2.5	1890	30000	6.7	1950	1.5	2200	30000	
A 55 4_262.6	262.6	10.7	1650	2.1	1980	30000	5.3	2000	1.3	2200	30000	
A 55 4_324.7	324.7	8.6	1750	1.8	2030	30000	4.3	2000	1.0	2200	30000	
A 55 4_414.0	414.0	6.8	1850	1.5	2080	30000	3.4	2000	0.80	2200	30000	
A 55 4_505.9	505.9	5.5	1900	1.2	2120	30000	2.8	2000	0.65	2200	30000	
A 55 4_542.0	542.0	5.2	1900	1.2	2140	30000	2.6	2000	0.61	2200	30000	
A 55 4_599.5	599.5	4.7	1950	1.1	2150	30000	2.3	2000	0.55	2200	30000	
A 55 4_655.1	655.1	4.3	1950	1.0	2180	30000	2.1	2000	0.50	2200	30000	
A 55 4_714.7	714.7	3.9	1950	0.90	2200	30000	2.0	2000	0.46	2200	30000	
A 55 4_793.0	793.0	3.5	2000	0.83	2200	30000	1.8	2000	0.42	2200	30000	

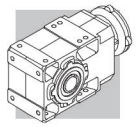

A 55 — 2000 Nm

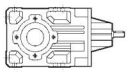

	i	n_1 = 900 min^{-1}					n_1 = 500 min^{-1}					
		n_2 min^{-1}	M_{n2} Nm	P_{n1} kW	R_{n1} N	R_{n2} N	n_2 min^{-1}	M_{n2} Nm	P_{n1} kW	R_{n1} N	R_{n2} N	
A 55 2_4.9	4.9	184	1000	20	2850	21400	102	1160	13.1	3500	25600	
A 55 2_6.4	6.4	141	1060	16.6	3500	23200	78	1230	10.7	3500	27700	
A 55 2_8.5	8.5	106	1060	12.6	3500	25400	59	1230	8.1	3500	30000	
A 55 2_10.4	10.4	87	1120	10.8	3500	27000	48	1290	6.9	3500	30000	
A 55 2_13.1	13.1	69	1120	8.6	3500	29100	38	1290	5.5	3500	30000	
A 55 2_15.7	15.7	57	1120	7.2	3500	30000	32	1290	4.6	3500	30000	
A 55 2_19.2	19.2	47	1230	6.4	3500	30000	26.0	1420	4.1	3500	30000	
A 55 3_23.8	23.8	38	2000	8.7	3280	30000	21.0	2000	4.8	3500	30000	
A 55 3_29.9	29.9	30	2000	6.9	3450	30000	16.7	2000	3.8	3500	30000	
A 55 3_40.3	40.3	22.3	2000	5.1	3500	30000	12.4	2000	2.9	3500	30000	
A 55 3_51.0	51.0	17.6	2000	4.1	3500	30000	9.8	2000	2.3	3500	30000	
A 55 3_64.3	64.3	14.0	2000	3.2	3500	30000	7.8	2000	1.8	3500	30000	
A 55 3_79.5	79.5	11.3	2000	2.6	3500	30000	6.3	2000	1.4	3500	30000	
A 55 3_101.4	101.4	8.9	2000	2.0	3500	30000	4.9	2000	1.1	3500	30000	
A 55 3_123.9	123.9	7.3	2000	1.7	3500	30000	4.0	2000	0.93	3500	30000	301
A 55 3_132.7	132.7	6.8	2000	1.6	3500	30000	3.8	2000	0.87	3500	30000	
A 55 3_146.8	146.8	6.1	2000	1.4	3500	30000	3.4	2000	0.78	3500	30000	
A 55 3_160.4	160.4	5.6	2000	1.3	3500	30000	3.1	2000	0.72	3500	30000	
A 55 3_175.0	175.0	5.1	2000	1.2	3500	30000	2.9	2000	0.66	3500	30000	
A 55 3_194.2	194.2	4.6	2000	1.1	3500	30000	2.6	2000	0.59	3500	30000	
A 55 4_208.1	208.1	4.3	2000	1.0	2200	30000	2.4	2000	0.57	2200	30000	
A 55 4_262.6	262.6	3.4	2000	0.81	2200	30000	1.9	2000	0.45	2200	30000	
A 55 4_324.7	324.7	2.8	2000	0.65	2200	30000	1.5	2000	0.36	2200	30000	
A 55 4_414.0	414.0	2.2	2000	0.51	2200	30000	1.2	2000	0.28	2200	30000	
A 55 4_505.9	505.9	1.8	2000	0.42	2200	30000	1.0	2000	0.23	2200	30000	
A 55 4_542.0	542.0	1.7	2000	0.39	2200	30000	0.92	2000	0.22	2200	30000	
A 55 4_599.5	599.5	1.5	2000	0.35	2200	30000	0.83	2000	0.20	2200	30000	
A 55 4_655.1	655.1	1.4	2000	0.32	2200	30000	0.76	2000	0.18	2200	30000	
A 55 4_714.7	714.7	1.3	2000	0.30	2200	30000	0.70	2000	0.16	2200	30000	
A 55 4_793.0	793.0	1.1	2000	0.27	2200	30000	0.63	2000	0.15	2200	30000	

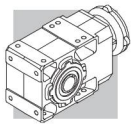

A 60 — 2800 Nm

	i	n_1 = 2800 min^{-1}					n_1 = 1400 min^{-1}					
		n_2 min^{-1}	M_{n2} Nm	P_{n1} kW	R_{n1} N	R_{n2} N	n_2 min^{-1}	M_{n2} Nm	P_{n1} kW	R_{n1} N	R_{n2} N	
A 60 2_7.9	7.9	356	950	38	2770	22500	178	1200	24	3400	27700	
A 60 2_10.3	10.3	271	950	29	2970	24600	136	1200	18.1	3740	30000	
A 60 2_12.7	12.7	220	1000	25	3020	26200	110	1250	15.3	3810	30000	
A 60 2_16.7	16.7	167	1050	19.6	3080	28600	84	1300	12.1	3910	30000	
A 60 2_20.6	20.6	136	1100	16.7	3100	30000	68	1400	10.6	3890	30000	
A 60 3_25.7	25.7	109	2760	35	2380	26900	54	2800	17.5	3800	30000	
A 60 3_27.9	27.9	101	2800	32	2780	27700	50	2800	16.2	3930	30000	
A 60 3_31.7	31.7	88	2800	29	2790	29000	44	2800	14.2	3940	30000	
A 60 3_34.3	34.3	82	2800	26	2920	30000	41	2800	13.2	4060	30000	
A 60 3_41.7	41.7	67	2800	22	2940	30000	34	2800	10.8	4090	30000	
A 60 3_45.2	45.2	62	2800	20	3060	30000	31	2800	10.0	4200	30000	
A 60 3_51.3	51.3	55	2800	17.6	3030	30000	27.3	2800	8.8	4180	30000	
A 60 3_55.6	55.6	50	2800	16.2	3140	30000	25.2	2800	8.1	4280	30000	
A 60 3_65.0	65.0	43	2800	13.9	3110	30000	21.5	2800	6.9	4260	30000	
A 60 3_70.4	70.4	40	2800	12.8	3210	30000	19.9	2800	6.4	4360	30000	
A 60 3_79.7	79.7	35	2800	11.3	3160	30000	17.6	2800	5.7	4310	30000	
A 60 3_86.4	86.4	32	2800	10.4	3260	30000	16.2	2800	5.2	4410	30000	
A 60 3_99.5	99.5	28.1	2800	9.1	3210	30000	14.1	2800	4.5	4360	30000	
A 60 3_107.8	107.8	26.0	2800	8.4	3300	30000	13.0	2800	4.2	4450	30000	
A 60 3_123.0	123.0	22.8	2800	7.3	3250	30000	11.4	2800	3.7	4400	30000	305
A 60 3_133.3	133.3	21.0	2800	6.8	3340	30000	10.5	2800	3.4	4490	30000	
A 60 3_144.0	144.0	19.4	2800	6.3	3280	30000	9.7	2800	3.1	4420	30000	
A 60 3_156.0	156.0	17.9	2800	5.8	3360	30000	9.0	2800	2.9	4510	30000	
A 60 3_171.5	171.5	16.3	2800	5.3	3290	30000	8.2	2800	2.6	4430	30000	
A 60 3_185.8	185.8	15.1	2800	4.9	3370	30000	7.5	2800	2.4	4520	30000	
A 60 4_208.7	208.7	13.4	2800	4.4	2720	30000	6.7	2800	2.2	3500	30000	
A 60 4_226.1	226.1	12.4	2800	4.1	2770	30000	6.2	2800	2.0	3500	30000	
A 60 4_264.3	264.3	10.6	2800	3.5	2860	30000	5.3	2800	1.7	3500	30000	
A 60 4_286.3	286.3	9.8	2800	3.2	2900	30000	4.9	2800	1.6	3500	30000	
A 60 4_324.2	324.2	8.6	2800	2.8	2960	30000	4.3	2800	1.4	3500	30000	
A 60 4_351.2	351.2	8.0	2800	2.6	2990	30000	4.0	2800	1.3	3500	30000	
A 60 4_404.7	404.7	6.9	2800	2.3	3050	30000	3.5	2800	1.1	3500	30000	
A 60 4_438.4	438.4	6.4	2800	2.1	3070	30000	3.2	2800	1.1	3500	30000	
A 60 4_500.3	500.3	5.6	2800	1.8	3110	30000	2.8	2800	0.92	3500	30000	
A 60 4_542.0	542.0	5.2	2800	1.7	3140	30000	2.6	2800	0.85	3500	30000	
A 60 4_585.8	585.8	4.8	2800	1.6	3150	30000	2.4	2800	0.79	3500	30000	
A 60 4_634.6	634.6	4.4	2800	1.5	3170	30000	2.2	2800	0.73	3500	30000	
A 60 4_697.3	697.3	4.0	2800	1.3	3190	30000	2.0	2800	0.66	3500	30000	
A 60 4_755.4	755.4	3.7	2800	1.2	3210	30000	1.9	2800	0.61	3500	30000	

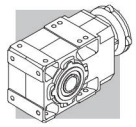

A 60 — 2800 Nm

	i	n_1 = 900 min^{-1}					n_1 = 500 min^{-1}					
		n_2 min^{-1}	M_{n2} Nm	P_{n1} kW	R_{n1} N	R_{n2} N	n_2 min^{-1}	M_{n2} Nm	P_{n1} kW	R_{n1} N	R_{n2} N	
A 60 2_7.9	7.9	114	1300	16.6	4190	30000	64	1550	11.0	4700	30000	
A 60 2_10.3	10.3	87	1300	12.6	4470	30000	48	1550	8.4	4700	30000	
A 60 2_12.7	12.7	71	1400	11.0	4490	30000	39	1700	7.5	4700	30000	
A 60 2_16.7	16.7	54	1450	8.7	4610	30000	29.9	1700	5.7	4700	30000	
A 60 2_20.6	20.6	44	1550	7.5	4600	30000	24.3	1800	4.9	4700	30000	
A 60 3_25.7	25.7	35	2800	11.3	4680	30000	19.4	2800	6.3	4700	30000	
A 60 3_27.9	27.9	32	2800	10.4	4700	30000	18.0	2800	5.8	4700	30000	
A 60 3_31.7	31.7	28.4	2800	9.2	4700	30000	15.8	2800	5.1	4700	30000	
A 60 3_34.3	34.3	26.2	2800	8.5	4700	30000	14.6	2800	4.7	4700	30000	
A 60 3_41.7	41.7	21.6	2800	7.0	4700	30000	12.0	2800	3.9	4700	30000	
A 60 3_45.2	45.2	19.9	2800	6.4	4700	30000	11.1	2800	3.6	4700	30000	
A 60 3_51.3	51.3	17.5	2800	5.6	4700	30000	9.7	2800	3.1	4700	30000	
A 60 3_55.6	55.6	16.2	2800	5.2	4700	30000	9.0	2800	2.9	4700	30000	
A 60 3_65.0	65.0	13.8	2800	4.5	4700	30000	7.7	2800	2.5	4700	30000	
A 60 3_70.4	70.4	12.8	2800	4.1	4700	30000	7.1	2800	2.3	4700	30000	
A 60 3_79.7	79.7	11.3	2800	3.6	4700	30000	6.3	2800	2.0	4700	30000	
A 60 3_86.4	86.4	10.4	2800	3.4	4700	30000	5.8	2800	1.9	4700	30000	
A 60 3_99.5	99.5	9.0	2800	2.9	4700	30000	5.0	2800	1.6	4700	30000	
A 60 3_107.8	107.8	8.3	2800	2.7	4700	30000	4.6	2800	1.5	4700	30000	
A 60 3_123.0	123.0	7.3	2800	2.4	4700	30000	4.1	2800	1.3	4700	30000	305
A 60 3_133.3	133.3	6.8	2800	2.2	4700	30000	3.8	2800	1.2	4700	30000	
A 60 3_144.0	144.0	6.2	2800	2.0	4700	30000	3.5	2800	1.1	4700	30000	
A 60 3_156.0	156.0	5.8	2800	1.9	4700	30000	3.2	2800	1.0	4700	30000	
A 60 3_171.5	171.5	5.2	2800	1.7	4700	30000	2.9	2800	0.94	4700	30000	
A 60 3_185.8	185.8	4.8	2800	1.6	4700	30000	2.7	2800	0.87	4700	30000	
A 60 4_208.7	208.7	4.3	2800	1.4	3500	30000	2.4	2800	0.79	3500	30000	
A 60 4_226.1	226.1	4.0	2800	1.3	3500	30000	2.2	2800	0.73	3500	30000	
A 60 4_264.3	264.3	3.4	2800	1.1	3500	30000	1.9	2800	0.62	3500	30000	
A 60 4_286.3	286.3	3.1	2800	1.0	3500	30000	1.7	2800	0.58	3500	30000	
A 60 4_324.2	324.2	2.8	2800	0.91	3500	30000	1.5	2800	0.51	3500	30000	
A 60 4_351.2	351.2	2.6	2800	0.84	3500	30000	1.4	2800	0.47	3500	30000	
A 60 4_404.7	404.7	2.2	2800	0.73	3500	30000	1.2	2800	0.41	3500	30000	
A 60 4_438.4	438.4	2.1	2800	0.68	3500	30000	1.1	2800	0.38	3500	30000	
A 60 4_500.3	500.3	1.8	2800	0.59	3500	30000	1.0	2800	0.33	3500	30000	
A 60 4_542.0	542.0	1.7	2800	0.55	3500	30000	0.92	2800	0.30	3500	30000	
A 60 4_585.8	585.8	1.5	2800	0.51	3500	30000	0.85	2800	0.28	3500	30000	
A 60 4_634.6	634.6	1.4	2800	0.47	3500	30000	0.79	2800	0.26	3500	30000	
A 60 4_697.3	697.3	1.3	2800	0.43	3500	30000	0.72	2800	0.24	3500	30000	
A 60 4_755.4	755.4	1.2	2800	0.39	3500	30000	0.66	2800	0.22	3500	30000	

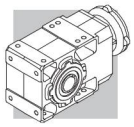

A 70 — 5000 Nm

	i	n_1 = 2800 min^{-1}					n_1 = 1400 min^{-1}					
		n_2 min^{-1}	M_{n2} Nm	P_{n1} kW	R_{n1} N	R_{n2} N	n_2 min^{-1}	M_{n2} Nm	P_{n1} kW	R_{n1} N	R_{n2} N	
A 70 3_9.4	9.4	297	2300	79	1900	25900	148	2800	48	2550	31900	309
A 70 3_10.2	10.2	274	2400	76	2480	26400	137	3200	50	1480	31900	
A 70 3_12.1	12.1	232	2400	64	2420	28000	116	3200	43	1400	33900	
A 70 3_13.1	13.1	214	2600	64	2420	28400	107	3350	41	2100	34600	
A 70 3_15.4	15.4	182	2700	56	2100	29900	91	3350	35	2430	36700	
A 70 3_16.7	16.7	168	2850	55	2500	30400	84	3600	35	2590	37200	
A 70 3_19.7	19.7	142	2900	48	2030	32100	71	3700	30	1790	39300	
A 70 3_21.3	21.3	131	3000	45	2750	32900	66	4000	30	1830	39800	
A 70 3_23.5	23.5	119	3500	48	4930	32900	60	4300	30	6250	40500	
A 70 3_27.8	27.8	101	3450	40	4960	35100	50	4200	24	6300	43300	
A 70 3_30.1	30.1	93	3700	40	4970	35600	47	4550	24	6300	43900	
A 70 3_35.4	35.4	79	3650	33	5040	37900	40	4500	21	6370	46600	
A 70 3_38.4	38.4	73	3950	33	5040	38400	36	4850	20	6380	47300	
A 70 3_45.2	45.2	62	3900	28	5050	40800	31	4800	17.1	6400	50000	
A 70 3_49.0	49.0	57	4250	28	5050	41300	28.6	5000	16.4	6450	50000	
A 70 3_53.2	53.2	53	4100	25	5030	42900	26.3	5000	15.1	6380	50000	
A 70 3_57.7	57.7	49	4450	25	5030	43400	24.3	5000	14.0	6490	50000	
A 70 3_66.9	66.9	42	4350	21	5050	46000	20.9	5000	12.0	6480	50000	
A 70 3_72.5	72.5	39	4750	21	5040	46500	19.3	5000	11.1	6580	50000	
A 70 3_79.3	79.3	35	4600	18.7	5020	48400	17.6	5000	10.2	6520	50000	
A 70 3_85.9	85.9	33	4950	18.6	5030	49100	16.3	5000	9.4	6620	50000	
A 70 3_96.2	96.2	29.1	4850	16.2	5000	50000	14.6	5000	8.4	6570	50000	
A 70 3_104.2	104.2	26.9	5000	15.5	5060	50000	13.4	5000	7.7	6660	50000	
A 70 3_120.6	120.6	23.2	5000	13.4	5010	50000	11.6	5000	6.7	6610	50000	
A 70 3_130.7	130.7	21.4	5000	12.3	5100	50000	10.7	5000	6.2	6690	50000	
A 70 3_141.9	141.9	19.7	5000	11.4	5040	50000	9.9	5000	5.7	6640	50000	
A 70 3_153.7	153.7	18.2	3300	6.9	5410	50000	9.1	4050	4.2	6920	50000	
A 70 4_169.8	169.8	16.5	5000	9.7	1130	50000	8.2	5000	4.9	2520	50000	
A 70 4_183.9	183.9	15.2	5000	9.0	1450	50000	7.6	5000	4.5	2670	50000	
A 70 4_220.3	220.3	12.7	5000	7.5	1560	50000	6.4	5000	3.7	2710	50000	
A 70 4_238.6	238.6	11.7	5000	6.9	1860	50000	5.9	5000	3.5	2770	50000	
A 70 4_292.0	292.0	9.6	5000	5.6	1900	50000	4.8	5000	2.8	2790	50000	
A 70 4_316.4	316.4	8.9	5000	5.2	2110	50000	4.4	5000	2.6	2850	50000	
A 70 4_369.4	369.4	7.6	5000	4.5	2110	50000	3.8	5000	2.2	2840	50000	
A 70 4_400.2	400.2	7.0	5000	4.1	2160	50000	3.5	5000	2.1	2900	50000	
A 70 4_475.8	475.8	5.9	5000	3.5	2150	50000	2.9	5000	1.7	2890	50000	
A 70 4_515.4	515.4	5.4	5000	3.2	2200	50000	2.7	5000	1.6	2940	50000	
A 70 4_595.0	595.0	4.7	5000	2.8	2190	50000	2.4	5000	1.4	2920	50000	
A 70 4_644.6	644.6	4.3	5000	2.6	2230	50000	2.2	5000	1.3	2970	50000	
A 70 4_705.1	705.1	4.0	5000	2.3	2200	50000	2.0	5000	1.2	2940	50000	
A 70 4_763.9	763.9	3.7	5000	2.2	2250	50000	1.8	5000	1.1	2990	50000	
A 70 4_855.3	855.3	3.3	5000	1.9	2220	50000	1.6	5000	0.96	2960	50000	
A 70 4_926.5	926.5	3.0	5000	1.8	2270	50000	1.5	5000	0.89	3000	50000	
A 70 4_1072	1072	2.6	5000	1.5	2240	50000	1.3	5000	0.77	2970	50000	
A 70 4_1161	1161	2.4	5000	1.4	2280	50000	1.2	5000	0.71	3020	50000	
A 70 4_1242	1242	2.3	5000	1.3	2250	50000	1.1	5000	0.66	2980	50000	
A 70 4_1346	1346	2.1	5000	1.2	2290	50000	1.0	5000	0.61	3030	50000	
A 70 4_1583	1583	1.8	5000	1.0	2260	50000	0.88	5000	0.52	2990	50000	
A 70 4_1715	1715	1.6	5000	0.96	2300	50000	0.82	5000	0.48	3040	50000	

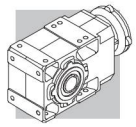

A 70 — 5000 Nm

	i	n_1 = 900 min^{-1}					n_1 = 500 min^{-1}					
		n_2 min^{-1}	M_{n2} Nm	P_{n1} kW	R_{n1} N	R_{n2} N	n_2 min^{-1}	M_{n2} Nm	P_{n1} kW	R_{n1} N	R_{n2} N	
A 70 3_9.4	9.4	95	3000	33	4290	36900	53	3000	18.3	7000	45400	
A 70 3_10.2	10.2	88	3250	33	4290	37400	49	3250	18.3	7000	46100	
A 70 3_12.1	12.1	75	3650	31	1620	38700	41	3650	17.4	6470	47900	
A 70 3_13.1	13.1	69	3950	31	1650	39200	38	3950	17.4	6500	48600	
A 70 3_15.4	15.4	58	3700	25	3510	42200	32	3700	13.8	7000	50000	
A 70 3_16.7	16.7	54	4000	25	3560	42800	30	4000	13.8	7000	50000	
A 70 3_19.7	19.7	46	3700	19.5	4910	46100	25.4	3700	10.8	7000	50000	
A 70 3_21.3	21.3	42	4000	19.4	4950	46800	23.5	4000	10.8	7000	50000	
A 70 3_23.5	23.5	38	4900	21.6	7000	46300	21.3	5000	12.2	7000	50000	
A 70 3_27.8	27.8	32	4800	17.9	7000	49400	18.0	5000	10.4	7000	50000	
A 70 3_30.1	30.1	29.9	5000	17.2	7000	50000	16.6	5000	9.6	7000	50000	
A 70 3_35.4	35.4	25.4	5000	14.6	7000	50000	14.1	5000	8.1	7000	50000	
A 70 3_38.4	38.4	23.4	5000	13.5	7000	50000	13.0	5000	7.5	7000	50000	
A 70 3_45.2	45.2	19.9	5000	11.4	7000	50000	11.1	5000	6.4	7000	50000	
A 70 3_49.0	49.0	18.4	5000	10.6	7000	50000	10.2	5000	5.9	7000	50000	
A 70 3_53.2	53.2	16.9	5000	9.7	7000	50000	9.4	5000	5.4	7000	50000	
A 70 3_57.7	57.7	15.6	5000	9.0	7000	50000	8.7	5000	5.0	7000	50000	
A 70 3_66.9	66.9	13.4	5000	7.7	7000	50000	7.5	5000	4.3	7000	50000	
A 70 3_72.5	72.5	12.4	5000	7.1	7000	50000	6.9	5000	4.0	7000	50000	
A 70 3_79.3	79.3	11.3	5000	6.5	7000	50000	6.3	5000	3.6	7000	50000	
A 70 3_85.9	85.9	10.5	5000	6.0	7000	50000	5.8	5000	3.3	7000	50000	
A 70 3_96.2	96.2	9.4	5000	5.4	7000	50000	5.2	5000	3.0	7000	50000	
A 70 3_104.2	104.2	8.6	5000	5.0	7000	50000	4.8	5000	2.8	7000	50000	
A 70 3_120.6	120.6	7.5	5000	4.3	7000	50000	4.1	5000	2.4	7000	50000	
A 70 3_130.7	130.7	6.9	5000	4.0	7000	50000	3.8	5000	2.2	7000	50000	309
A 70 3_141.9	141.9	6.3	5000	3.7	7000	50000	3.5	5000	2.0	7000	50000	
A 70 3_153.7	153.7	5.9	4600	3.1	7000	50000	3.3	5000	1.9	7000	50000	
A 70 4_169.8	169.8	5.3	5000	3.1	3170	50000	2.9	5000	1.7	3500	50000	
A 70 4_183.9	183.9	4.9	5000	2.9	3240	50000	2.7	5000	1.6	3500	50000	
A 70 4_220.3	220.3	4.1	5000	2.4	3270	50000	2.3	5000	1.3	3500	50000	
A 70 4_238.6	238.6	3.8	5000	2.2	3340	50000	2.1	5000	1.2	3500	50000	
A 70 4_292.0	292.0	3.1	5000	1.8	3350	50000	1.7	5000	1.0	3500	50000	
A 70 4_316.4	316.4	2.8	5000	1.7	3410	50000	1.6	5000	0.93	3500	50000	
A 70 4_369.4	369.4	2.4	5000	1.4	3410	50000	1.4	5000	0.80	3500	50000	
A 70 4_400.2	400.2	2.2	5000	1.3	3460	50000	1.2	5000	0.74	3500	50000	
A 70 4_475.8	475.8	1.9	5000	1.1	3450	50000	1.1	5000	0.62	3500	50000	
A 70 4_515.4	515.4	1.7	5000	1.0	3500	50000	0.97	5000	0.57	3500	50000	
A 70 4_595.0	595.0	1.5	5000	0.89	3480	50000	0.84	5000	0.49	3500	50000	
A 70 4_644.6	644.6	1.4	5000	0.82	3500	50000	0.78	5000	0.46	3500	50000	
A 70 4_705.1	705.1	1.3	5000	0.75	3500	50000	0.71	5000	0.42	3500	50000	
A 70 4_763.9	763.9	1.2	5000	0.69	3500	50000	0.65	5000	0.39	3500	50000	
A 70 4_855.3	855.3	1.1	5000	0.62	3500	50000	0.58	5000	0.34	3500	50000	
A 70 4_926.5	926.5	0.97	5000	0.57	3500	50000	0.54	5000	0.32	3500	50000	
A 70 4_1072	1072	0.84	5000	0.49	3500	50000	0.47	5000	0.27	3500	50000	
A 70 4_1161	1161	0.77	5000	0.46	3500	50000	0.43	5000	0.25	3500	50000	
A 70 4_1242	1242	0.72	5000	0.43	3500	50000	0.40	5000	0.24	3500	50000	
A 70 4_1346	1346	0.67	5000	0.39	3500	50000	0.37	5000	0.22	3500	50000	
A 70 4_1583	1583	0.57	5000	0.33	3500	50000	0.32	5000	0.19	3500	50000	
A 70 4_1715	1715	0.52	5000	0.31	3500	50000	0.29	5000	0.17	3500	50000	

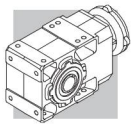

A 80 — 8000 Nm

	i	n_1 = 2800 min^{-1}					n_1 = 1400 min^{-1}					
		n_2 min^{-1}	M_{n2} Nm	P_{n1} kW	R_{n1} N	R_{n2} N	n_2 min^{-1}	M_{n2} Nm	P_{n1} kW	R_{n1} N	R_{n2} N	
A 80 3_9.8	9.8	285	3100	102	—	26300	142	3900	64	—	32100	
A 80 3_10.7	10.7	263	3450	104	—	26300	131	4300	65	—	32300	
A 80 3_12.3	12.3	228	3450	91	—	27700	114	4300	56	—	34000	
A 80 3_13.3	13.3	211	3450	84	1150	28700	105	4300	52	1150	35200	
A 80 3_15.5	15.5	181	3300	69	1560	30600	91	4100	43	1730	37600	
A 80 3_16.7	16.7	167	3600	69	1440	30900	84	4500	43	1460	37900	
A 80 3_19.3	19.3	145	3500	58	1870	32800	72	4400	37	1880	40200	
A 80 3_20.9	20.9	134	3840	59	1670	33100	67	4800	37	1740	40600	
A 80 3_22.6	22.6	124	5050	72	4500	31200	62	6250	45	5830	38400	
A 80 3_24.5	24.5	114	5500	72	4470	31300	57	6750	44	5840	38600	
A 80 3_28.2	28.2	99	5350	61	4700	33500	50	6600	38	5960	41200	
A 80 3_30.6	30.6	92	5250	55	4840	34900	46	6450	34	6140	43000	
A 80 3_35.5	35.5	79	5700	52	4700	36000	39	7000	32	6000	44300	
A 80 3_38.5	38.5	73	6150	51	4720	36200	36	7600	32	6000	44500	
A 80 3_44.5	44.5	63	6050	44	4790	38600	31	7450	27	6070	47500	
A 80 3_48.2	48.2	58	6550	44	4790	38800	29.1	8000	27	6090	47900	
A 80 3_55.2	55.2	51	6400	37	4710	41300	25.4	7900	23	6050	50800	
A 80 3_59.8	59.8	47	6950	37	4690	41500	23.4	8000	22	6170	52300	
A 80 3_66.8	66.8	42	6800	33	4670	43700	21.0	8000	19.3	6150	54600	
A 80 3_72.4	72.4	39	7350	33	4680	44000	19.3	8000	17.8	6280	56500	
A 80 3_82.3	82.3	34	7200	28	4570	46600	17.0	8000	15.7	6230	59300	
A 80 3_89.2	89.2	31	7800	28	4570	46900	15.7	8000	14.5	6350	61400	
A 80 3_96.0	96.0	29.2	7500	25	4410	48900	14.6	8000	13.4	6260	63000	
A 80 3_104.0	104.0	26.9	8000	25	4500	49500	13.5	8000	12.4	6380	65000	
A 80 3_116.0	116.0	24.1	7950	22	4230	51700	12.1	8000	11.1	6300	65000	312
A 80 3_125.6	125.6	22.3	8000	21	4630	53400	11.1	8000	10.3	6420	65000	
A 80 3_144.7	144.7	19.3	8000	17.8	4320	56400	9.7	8000	8.9	6350	65000	
A 80 3_156.8	156.8	17.9	8000	16.4	4750	58300	8.9	8000	8.2	6460	65000	
A 80 4_171.3	171.3	16.3	8000	15.4	—	65000	8.2	8000	7.7	1230	65000	
A 80 4_214.7	214.7	13.0	8000	12.3	—	65000	6.5	8000	6.1	1400	65000	
A 80 4_232.6	232.6	12.0	8000	11.3	—	65000	6.0	8000	5.7	1810	65000	
A 80 4_277.3	277.3	10.1	8000	9.5	540	65000	5.0	8000	4.8	1930	65000	
A 80 4_300.4	300.4	9.3	8000	8.8	900	65000	4.7	8000	4.4	2290	65000	
A 80 4_354.0	354.0	7.9	8000	7.4	800	65000	4.0	8000	3.7	2190	65000	
A 80 4_383.5	383.5	7.3	8000	6.9	1140	65000	3.7	8000	3.4	2530	65000	
A 80 4_442.1	442.1	6.3	8000	6.0	1040	65000	3.2	8000	3.0	2430	65000	
A 80 4_478.9	478.9	5.8	8000	5.5	1370	65000	2.9	8000	2.8	2670	65000	
A 80 4_560.5	560.5	5.0	8000	4.7	1240	65000	2.5	8000	2.4	2630	65000	
A 80 4_607.2	607.2	4.6	8000	4.3	1550	65000	2.3	8000	2.2	2720	65000	
A 80 4_703.5	703.5	4.0	8000	3.7	1440	65000	2.0	8000	1.9	2690	65000	
A 80 4_762.1	762.1	3.7	8000	3.5	1730	65000	1.8	8000	1.7	2760	65000	
A 80 4_829.5	829.5	3.4	8000	3.2	1530	65000	1.7	8000	1.6	2720	65000	
A 80 4_898.7	898.7	3.1	8000	2.9	1820	65000	1.6	8000	1.5	2780	65000	
A 80 4_1001	1001	2.8	8000	2.6	1620	65000	1.4	8000	1.3	2740	65000	
A 80 4_1085	1085	2.6	8000	2.4	1900	65000	1.3	8000	1.2	2800	65000	
A 80 4_1237	1237	2.3	8000	2.1	1660	65000	1.1	8000	1.1	2750	65000	
A 80 4_1340	1340	2.1	8000	2.0	1940	65000	1.0	8000	0.98	2810	65000	
A 80 4_1438	1438	1.9	8000	1.8	1730	65000	0.97	8000	0.92	2770	65000	
A 80 4_1558	1558	1.8	8000	1.7	2000	65000	0.90	8000	0.85	2830	65000	

(—) Contact our technical service department advising radial load data (rotation direction, orientation, position)

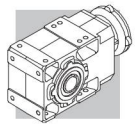

A 80 — 8000 Nm

	i	n_1 = 900 min^{-1}					n_1 = 500 min^{-1}					
		n_2 min^{-1}	M_{n2} Nm	P_{n1} kW	R_{n1} N	R_{n2} N	n_2 min^{-1}	M_{n2} Nm	P_{n1} kW	R_{n1} N	R_{n2} N	
A 80 3_9.8	9.8	92	4450	47	—	36700	51	5300	31	—	43800	
A 80 3_10.7	10.7	84	4900	48	—	36900	47	5850	32	—	44000	
A 80 3_12.3	12.3	73	4900	41	—	38900	41	5850	27	—	46400	
A 80 3_13.3	13.3	68	4900	38	1360	40200	38	5850	25	1600	47900	
A 80 3_15.5	15.5	58	4650	31	2130	43000	32	5550	21	2530	51300	
A 80 3_16.7	16.7	54	5100	32	1840	43400	29.9	6100	21	2120	51700	
A 80 3_19.3	19.3	47	5000	27	2260	46000	25.9	6000	17.9	2530	54800	
A 80 3_20.9	20.9	43	5470	27	2030	46400	23.9	6500	17.9	2530	55400	
A 80 3_22.6	22.6	40	7100	33	6810	43900	22.1	8000	20.4	7000	53400	
A 80 3_24.5	24.5	37	7700	33	6800	44100	20.4	8000	18.8	7000	55300	
A 80 3_28.2	28.2	32	7550	28	6940	47000	17.7	8000	16.3	7000	58400	
A 80 3_30.6	30.6	29.4	7400	25	7000	49000	16.4	8000	15.1	7000	60400	
A 80 3_35.5	35.5	25.3	8000	23	6980	50600	14.1	8000	13.0	7000	63900	
A 80 3_38.5	38.5	23.4	8000	22	7000	52400	13.0	8000	12.0	7000	65000	
A 80 3_44.5	44.5	20.2	8000	18.6	7000	55400	11.2	8000	10.3	7000	65000	
A 80 3_48.2	48.2	18.7	8000	17.2	7000	57300	10.4	8000	9.6	7000	65000	
A 80 3_55.2	55.2	16.3	8000	15.0	7000	60300	9.1	8000	8.3	7000	65000	
A 80 3_59.8	59.8	15.1	8000	13.9	7000	62300	8.4	8000	7.7	7000	65000	
A 80 3_66.8	66.8	13.5	8000	12.4	7000	65000	7.5	8000	6.9	7000	65000	
A 80 3_72.4	72.4	12.4	8000	11.4	7000	65000	6.9	8000	6.4	7000	65000	
A 80 3_82.3	82.3	10.9	8000	10.1	7000	65000	6.1	8000	5.6	7000	65000	
A 80 3_89.2	89.2	10.1	8000	9.3	7000	65000	5.6	8000	5.2	7000	65000	
A 80 3_96.0	96.0	9.4	8000	8.6	7000	65000	5.2	8000	4.8	7000	65000	
A 80 3_104.0	104.0	8.7	8000	8.0	7000	65000	4.8	8000	4.4	7000	65000	
A 80 3_116.0	116.0	7.8	8000	7.1	7000	65000	4.3	8000	4.0	7000	65000	312
A 80 3_125.6	125.6	7.2	8000	6.6	7000	65000	4.0	8000	3.7	7000	65000	
A 80 3_144.7	144.7	6.2	8000	5.7	7000	65000	3.5	8000	3.2	7000	65000	
A 80 3_156.8	156.8	5.7	8000	5.3	7000	65000	3.2	8000	2.9	7000	65000	
A 80 4_171.3	171.3	5.3	8000	4.9	2300	65000	2.9	8000	2.7	3500	65000	
A 80 4_214.7	214.7	4.2	8000	3.9	2470	65000	2.3	8000	2.2	3500	65000	
A 80 4_232.6	232.6	3.9	8000	3.6	2870	65000	2.1	8000	2.0	3500	65000	
A 80 4_277.3	277.3	3.2	8000	3.1	3000	65000	1.8	8000	1.7	3500	65000	
A 80 4_300.4	300.4	3.0	8000	2.8	3120	65000	1.7	8000	1.6	3500	65000	
A 80 4_354.0	354.0	2.5	8000	2.4	3100	65000	1.4	8000	1.3	3500	65000	
A 80 4_383.5	383.5	2.3	8000	2.2	3180	65000	1.3	8000	1.2	3500	65000	
A 80 4_442.1	442.1	2.0	8000	1.9	3160	65000	1.1	8000	1.1	3500	65000	
A 80 4_478.9	478.9	1.9	8000	1.8	3230	65000	1.0	8000	0.98	3500	65000	
A 80 4_560.5	560.5	1.6	8000	1.5	3210	65000	0.89	8000	0.84	3500	65000	
A 80 4_607.2	607.2	1.5	8000	1.4	3280	65000	0.82	8000	0.78	3500	65000	
A 80 4_703.5	703.5	1.3	8000	1.2	3260	65000	0.71	8000	0.67	3500	65000	
A 80 4_762.1	762.1	1.2	8000	1.1	3320	65000	0.66	8000	0.62	3500	65000	
A 80 4_829.5	829.5	1.1	8000	1.0	3280	65000	0.60	8000	0.57	3500	65000	
A 80 4_898.7	898.7	1.0	8000	0.94	3340	65000	0.56	8000	0.52	3500	65000	
A 80 4_1001	1001	0.90	8000	0.85	3300	65000	0.50	8000	0.47	3500	65000	
A 80 4_1085	1085	0.83	8000	0.78	3360	65000	0.46	8000	0.43	3500	65000	
A 80 4_1237	1237	0.73	8000	0.68	3310	65000	0.40	8000	0.38	3500	65000	
A 80 4_1340	1340	0.67	8000	0.63	3370	65000	0.37	8000	0.35	3500	65000	
A 80 4_1438	1438	0.63	8000	0.59	3330	65000	0.35	8000	0.33	3500	65000	
A 80 4_1558	1558	0.58	8000	0.54	3390	65000	0.32	8000	0.30	3500	65000	

(—) Contact our technical service department advising radial load data (rotation direction, orientation, position)

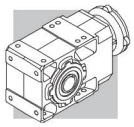

A 90 — 14000 Nm

	i	n_1 = 2800 min^{-1}					n_1 = 1400 min^{-1}					
		n_2 min^{-1}	M_{n2} Nm	P_{n1} kW	R_{n1} N	R_{n2} N	n_2 min^{-1}	M_{n2} Nm	P_{n1} kW	R_{n1} N	R_{n2} N	
A 90 3_9.7	9.7	289	7800	260	2440	27600	145	9050	151	5520	35000	
A 90 3_10.5	10.5	267	8350	257	2620	27700	134	9800	151	5530	34900	
A 90 3_12.6	12.6	221	8500	217	2700	29800	111	10450	133	4790	36700	
A 90 3_13.7	13.7	204	8050	189	4670	31800	102	11150	131	5060	36900	
A 90 3_15.6	15.6	180	8900	184	3240	32000	90	10950	113	5410	39400	
A 90 3_16.9	16.9	166	9650	184	3230	31900	83	11850	113	5440	39300	
A 90 3_19.4	19.4	144	9400	156	3160	34300	72	11550	96	5350	42300	
A 90 3_21.0	21.0	133	10150	156	3210	34300	67	12400	95	5510	42400	
A 90 3_22.3	22.3	126	9850	143	9660	35700	63	12150	88	12200	43900	
A 90 3_24.1	24.1	116	10700	143	9660	35500	58	13150	88	12200	43800	
A 90 3_29.1	29.1	96	10550	117	9800	38900	48	13000	72	12400	47900	
A 90 3_31.5	31.5	89	11450	117	9800	38800	44	14000	72	12400	47900	
A 90 3_35.8	35.8	78	11150	100	9910	41600	39	13750	62	12500	51100	
A 90 3_38.8	38.8	72	12100	100	9900	41500	36	14000	58	12700	52700	
A 90 3_44.6	44.6	63	11800	85	9920	44600	31	14000	51	12700	56000	
A 90 3_48.3	48.3	58	12800	85	9920	44500	29.0	14000	47	12800	58000	
A 90 3_55.0	55.0	51	12550	73	9960	47500	25.4	14000	41	12800	61400	
A 90 3_59.6	59.6	47	13550	73	9970	47500	23.5	14000	38	13000	63500	
A 90 3_68.8	68.8	41	13350	63	9960	50900	20.4	14000	33	13000	67400	
A 90 3_74.5	74.5	38	14000	61	10000	51700	18.8	14000	30	13100	69700	
A 90 3_80.4	80.4	35	13900	56	9920	53500	17.4	14000	28	13000	71900	
A 90 3_87.1	87.1	32	14000	52	10100	55500	16.1	14000	26	13200	74300	
A 90 3_98.6	98.6	28.4	14000	46	9990	58500	14.2	14000	23	13100	75000	
A 90 3_106.8	106.8	26.2	14000	42	10100	60600	13.1	14000	21	13300	75000	
A 90 3_116.9	116.9	24.0	14000	39	10100	63000	12.0	14000	19.3	13200	75000	
A 90 3_126.6	126.6	22.1	10650	27	10600	71400	11.1	13150	16.7	13400	75000	315
A 90 3_139.4	139.4	20.1	10350	24	10600	74500	10.0	12750	14.7	13400	75000	
A 90 3_151.0	151.0	18.5	11200	24	10600	75000	9.3	13800	14.7	13400	75000	
A 90 4_166.1	166.1	16.9	14000	28	—	75000	8.4	14000	13.9	—	75000	
A 90 4_180.0	180.0	15.6	14000	26	—	75000	7.8	14000	12.8	—	75000	
A 90 4_209.0	209.0	13.4	14000	22	—	75000	6.7	14000	11.0	—	75000	
A 90 4_226.4	226.4	12.4	14000	20	—	75000	6.2	14000	10.2	—	75000	
A 90 4_281.4	281.4	9.9	14000	16.4	—	75000	5.0	14000	8.2	—	75000	
A 90 4_304.9	304.9	9.2	14000	15.1	—	75000	4.6	14000	7.6	—	75000	
A 90 4_355.8	355.8	7.9	14000	13.0	—	75000	3.9	14000	6.5	—	75000	
A 90 4_385.4	385.4	7.3	14000	12.0	—	75000	3.6	14000	6.0	680	75000	
A 90 4_449.2	449.2	6.2	14000	10.3	—	75000	3.1	14000	5.1	—	75000	
A 90 4_486.6	486.6	5.8	14000	9.5	—	75000	2.9	14000	4.7	950	75000	
A 90 4_555.3	555.3	5.0	14000	8.3	—	75000	2.5	14000	4.2	740	75000	
A 90 4_601.6	601.6	4.7	14000	7.7	—	75000	2.3	14000	3.8	1200	75000	
A 90 4_707.9	707.9	4.0	14000	6.5	—	75000	2.0	14000	3.3	1050	75000	
A 90 4_766.9	766.9	3.7	14000	6.0	—	75000	1.8	14000	3.0	1490	75000	
A 90 4_865.1	865.1	3.2	14000	5.3	—	75000	1.6	14000	2.7	1170	75000	
A 90 4_937.2	937.2	3.0	14000	4.9	—	75000	1.5	14000	2.5	1590	75000	
A 90 4_1025	1025	2.7	14000	4.5	—	75000	1.4	14000	2.2	1330	75000	
A 90 4_1111	1111	2.5	14000	4.2	—	75000	1.3	14000	2.1	1740	75000	
A 90 4_1222	1222	2.3	14000	3.8	—	75000	1.1	14000	1.9	1380	75000	
A 90 4_1324	1324	2.1	14000	3.5	—	75000	1.1	14000	1.7	1790	75000	
A 90 4_1507	1507	1.9	14000	3.1	—	75000	0.93	14000	1.5	1440	75000	
A 90 4_1632	1632	1.7	14000	2.8	—	75000	0.86	14000	1.4	1840	75000	

(—) Contact our technical service department advising radial load data (rotation direction, orientation, position)

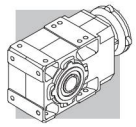

A 90 — 14000 Nm

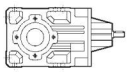

	i	n_1 = 900 min^{-1}					n_1 = 500 min^{-1}					
		n_2 min^{-1}	M_{n2} Nm	P_{n1} kW	R_{n1} N	R_{n2} N	n_2 min^{-1}	M_{n2} Nm	P_{n1} kW	R_{n1} N	R_{n2} N	
A 90 3_9.7	9.7	93	9050	97	9800	42300	52	9050	54	15000	53700	
A 90 3_10.5	10.5	86	9800	97	9810	42500	48	9800	54	15000	54200	
A 90 3_12.6	12.6	71	11800	97	6720	42100	40	11800	54	13500	54500	
A 90 3_13.7	13.7	66	12750	96	6770	42100	37	12800	54	13500	54600	
A 90 3_15.6	15.6	58	11550	77	8730	46700	32	11550	43	15000	59900	
A 90 3_16.9	16.9	53	12500	77	8750	46800	29.6	12500	43	15000	60300	
A 90 3_19.4	19.4	46	11550	62	9630	51400	25.8	11550	34	15000	65400	
A 90 3_21.0	21.0	43	12400	61	9790	51700	23.8	12400	34	15000	66100	
A 90 3_22.3	22.3	40	13850	64	14200	50200	22.5	14000	36	15000	64700	
A 90 3_24.1	24.1	37	14000	60	14400	51900	20.7	14000	33	15000	66900	
A 90 3_29.1	29.1	31	14000	50	14600	56200	17.2	14000	28	15000	72100	
A 90 3_31.5	31.5	28.6	14000	46	14800	58400	15.9	14000	26	15000	74700	
A 90 3_35.8	35.8	25.1	14000	40	14900	61700	14.0	14000	23	15000	75000	
A 90 3_38.8	38.8	23.2	14000	37	15000	63900	12.9	14000	21	15000	75000	
A 90 3_44.6	44.6	20.2	14000	33	15000	67700	11.2	14000	18.1	15000	75000	
A 90 3_48.3	48.3	18.6	14000	30	15000	70000	10.4	14000	16.7	15000	75000	
A 90 3_55.0	55.0	16.4	14000	26	15000	73800	9.1	14000	14.6	15000	75000	
A 90 3_59.6	59.6	15.1	14000	24	15000	75000	8.4	14000	13.5	15000	75000	
A 90 3_68.8	68.8	13.1	14000	21	15000	75000	7.3	14000	11.7	15000	75000	
A 90 3_74.5	74.5	12.1	14000	19.5	15000	75000	6.7	14000	10.8	15000	75000	
A 90 3_80.4	80.4	11.2	14000	18.0	15000	75000	6.2	14000	10.0	15000	75000	
A 90 3_87.1	87.1	10.3	14000	16.7	15000	75000	5.7	14000	9.3	15000	75000	
A 90 3_98.6	98.6	9.1	14000	14.7	15000	75000	5.1	14000	8.2	15000	75000	
A 90 3_106.8	106.8	8.4	14000	13.6	15000	75000	4.7	14000	7.5	15000	75000	
A 90 3_116.9	116.9	7.7	14000	12.4	15000	75000	4.3	14000	6.9	15000	75000	
A 90 3_126.6	126.6	7.1	14000	11.4	15000	75000	3.9	14000	6.4	15000	75000	315
A 90 3_139.4	139.4	6.5	14000	10.4	15000	75000	3.6	14000	5.8	15000	75000	
A 90 3_151.0	151.0	6.0	14000	9.6	15000	75000	3.3	14000	5.3	15000	75000	
A 90 4_166.1	166.1	5.4	14000	8.9	—	75000	3.0	14000	5.0	700	75000	
A 90 4_180.0	180.0	5.0	14000	8.2	—	75000	2.8	14000	4.6	1400	75000	
A 90 4_209.0	209.0	4.3	14000	7.1	—	75000	2.4	14000	3.9	1500	75000	
A 90 4_226.4	226.4	4.0	14000	6.5	500	75000	2.2	14000	3.6	2100	75000	
A 90 4_281.4	281.4	3.2	14000	5.3	690	75000	1.8	14000	2.9	2300	75000	
A 90 4_304.9	304.9	3.0	14000	4.9	1230	75000	1.6	14000	2.7	2900	75000	
A 90 4_355.8	355.8	2.5	14000	4.2	1240	75000	1.4	14000	2.3	2900	75000	
A 90 4_385.4	385.4	2.3	14000	3.8	1750	75000	1.3	14000	2.1	3400	75000	
A 90 4_449.2	449.2	2.0	14000	3.3	1540	75000	1.1	14000	1.8	3200	75000	
A 90 4_486.6	486.6	1.8	14000	3.0	2020	75000	1.0	14000	1.7	3500	75000	
A 90 4_555.3	555.3	1.6	14000	2.7	1810	75000	0.90	14000	1.5	3500	75000	
A 90 4_601.6	601.6	1.5	14000	2.5	2270	75000	0.83	14000	1.4	3500	75000	
A 90 4_707.9	707.9	1.3	14000	2.1	2120	75000	0.71	14000	1.2	3500	75000	
A 90 4_766.9	766.9	1.2	14000	1.9	2560	75000	0.65	14000	1.1	3500	75000	
A 90 4_865.1	865.1	1.0	14000	1.7	2240	75000	0.58	14000	0.95	3500	75000	
A 90 4_937.2	937.2	0.96	14000	1.6	2660	75000	0.53	14000	0.88	3500	75000	
A 90 4_1025	1025	0.88	14000	1.4	2400	75000	0.49	14000	0.80	3500	75000	
A 90 4_1111	1111	0.81	14000	1.3	2810	75000	0.45	14000	0.74	3500	75000	
A 90 4_1222	1222	0.74	14000	1.2	2450	75000	0.41	14000	0.67	3500	75000	
A 90 4_1324	1324	0.68	14000	1.1	2860	75000	0.38	14000	0.62	3500	75000	
A 90 4_1507	1507	0.60	14000	0.98	2410	75000	0.33	14000	0.55	3500	75000	
A 90 4_1632	1632	0.55	14000	0.91	2910	75000	0.31	14000	0.50	3500	75000	

(—) Contact our technical service department advising radial load data (rotation direction, orientation, position)

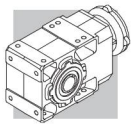

41 MOTOR AVAILABILITY

Please be aware that motor-gearbox combinations resulting from charts (C39) and (C40) are purely based on geometrical compatibility.

When selecting a gearmotor, refer to procedure specified at paragraph 11 and observe particularly the condition $S \geq f_s$.

(C 39)

		IEC_ BN (IM B5)											
		P63	P71	P80	P90	P100	P112	P132	P160	P180	P200	P225	P250
A 05 2		5.5_91.6	5.5_51.3	5.5_51.3									
A 10 2		5.5_91.6	5.5_91.6	5.5_65.9	5.5_65.9	5.5_65.9	5.5_65.9						
A 20 2		7.3_92.3 ⛔(10.3)	7.3_92.3 ⛔(10.3)	5.4_79.9	5.4_79.9	5.4_79.9	5.4_79.9						
A 20 3		109.2_380.9	109.2_380.9	109.2_380.9	109.2_380.9	109.2_380.9	109.2_380.9						
A 30 2		9.3_97.5 ⛔(10.5 ; 13.6_16.3)	9.3_97.5 ⛔(10.5 ; 13.6_16.3)	5.4_97.5	5.4_97.5	5.4_97.5	5.4_97.5						
A 30 3		109.1_400.8	109.1_400.8	109.1_400.8	109.1_400.8	109.1_400.8	109.1_400.8						
A 35 2		9.3_95.6 ⛔(13.1_20.4)	9.3_95.6 ⛔(13.1_20.4)	5.4_95.6	5.4_95.6	5.4_95.6	5.4_95.6	5.4_11.8					
A 35 3		105.5_393.2	105.5_393.2	105.5_393.2	105.5_393.2	105.5_393.2	105.5_393.2						
A 41 2		11.7_79.2 ⛔(13.8_17.8)	11.7_79.2 ⛔(13.8_17.8)	5.2_79.2	5.2_79.2	5.2_79.2	5.2_79.2	5.2_45.1					
A 41 3		92.8_376.8	92.8_376.8	92.8_376.8	92.8_376.8	92.8_376.8	92.8_376.8						
A 50 2		20.9	20.9	7.7_20.9	7.7_20.9	7.7_20.9	7.7_20.9	7.7_20.9	7.7_20.9	7.7_20.9			
A 50 3		51.7_190.6	51.7_190.6	24.0_190.6	24.0_190.6	24.0_190.6	24.0_190.6	24.0_109.4	24.0_109.4	24.0_109.4			
A 50 4	i =	211.0_778.2	211.0_778.2	211.0_778.2	211.0_778.2	211.0_778.2	211.0_778.2						
A 55 2				13.1_19.2	13.1_19.2	13.1_19.2	13.1_19.2	4.9_19.2	4.9_19.2	4.9_19.2			
A 55 3		64.3_194.2	64.3_194.2	23.8_194.2	23.8_194.2	23.8_194.2	23.8_194.2	23.8_123.9	23.8_123.9	23.8_123.9			
A 55 4		208.1_793.0	208.1_793.0	208.1_793.0	208.1_793.0	208.1_793.0	208.1_793.0						
A 60 2				10.3_20.6	10.3_20.6	10.3_20.6	10.3_20.6	7.9_20.6	7.9_20.6	7.9_20.6			
A 60 3		65.0_185.8	65.0_185.8	25.7_185.8	25.7_185.8	25.7_185.8	25.7_185.8	25.7_133.3	25.7_133.3	25.7_133.3			
A 60 4		208.7_755.4	208.7_755.4	208.7_755.4	208.7_755.4	208.7_755.4	208.7_755.4						
A 70 3				66.9_153.7	66.9_153.7	66.9_153.7	66.9_153.7	15.4_153.7 ⛔(23.5_30.1)	9.4_153.7	9.4_153.7	9.4_38.4 ⛔(19.7_21.3)		
A 70 4		292.0_1715	292.0_1715	169.8_1715	169.8_1715	169.8_1715	169.8_1715	169.8_644.6					
A 80 3				82.3_156.8	82.3_156.8	82.3_156.8	82.3_156.8	19.3_156.8 ⛔(22.6_38.5)	12.3_156.8 ⛔(22.6_24.5)	9.8_156.8	9.8_104.0	9.8_104.0	
A 80 4		354.0_1558	354.0_1558	171.3_1558	171.3_1558	171.3_1558	171.3_1558	171.3_762.1					
A 90 3				98.6_151.0	98.6_151.0	98.6_151.0	98.6_151.0	55.0_151.0	19.4_151.0 ⛔(22.3_38.8)	9.7_151.0	9.7_126.6	9.7_126.6	9.7_126.6
A 90 4		449.2_1632	449.2_1632	166.1_1632	166.1_1632	166.1_1632	166.1_1632	166.1_937.2	166.1_937.2	166.1_937.2			

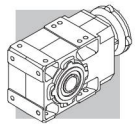

(C 40)

		M					
		M05	M1	M2	M3	M4	M5
A 05 2		5.5_91.6	5.5_51.3	5.5_65.9			
A 10 2		5.5_91.6	5.5_51.3	5.5_65.9	5.5_65.9		
A 20 2		7.3_92.3 ⛔ (10.3)	7.3_63.1 ⛔ (10.3)	5.4_79.9	5.4_79.9		
A 20 3		109.2_380.9	109.2_380.9	109.2_380.9	109.2_380.9		
A 30 2			9.3_76.5 ⛔ (10.5 ; 13.6_16.3)	5.4_97.5	5.4_97.5		
A 30 3		109.1_400.8	109.1_400.8	109.1_400.8	109.1_400.8		
A 35 2			9.3_95.6 ⛔ (13.1_20.4)	5.4_95.6	5.4_95.6	5.4_11.8	
A 35 3		105.5_393.2	105.5_393.2	105.5_393.2	105.5_393.2		
A 41 2			11.7_79.2 ⛔ (13.8_17.8)	5.2_79.2	5.2_79.2	5.2_45.1	
A 41 3		92.8_376.8	92.8_376.8	92.8_376.8	92.8_376.8		
A 50 2			20.9	7.7_20.9	7.7_20.9	7.7_20.9	7.7_20.9
A 50 3			51.7_190.6	24.0_190.6	24.0_190.6	24.0_109.4	24.0_109.4
A 50 4	i =		211.0_778.2	211.0_778.2	211.0_778.2		
A 55 2				13.1_19.2	13.1_19.2	4.9_19.2	4.9_19.2
A 55 3			64.3_194.2	23.8_194.2	23.8_194.2	23.8_123.9	23.8_123.9
A 55 4			208.1_793.0	208.1_793.0	208.1_793.0		
A 60 2				10.3_20.6	10.3_20.6	7.9_20.6	7.9_20.6
A 60 3				25.7_185.8	25.7_185.8	25.7_133.3	25.7_133.3
A 60 4			208.7_755.4	208.7_755.4	208.7_755.4		
A 70 3				66.9_153.7	66.9_153.7	15.4_153.7 ⛔ (23.5_30.1)	15.4_153.7 ⛔ (23.5_30.1)
A 70 4			292.0_1715	169.8_1715	169.8_1715	169.8_644.6	
A 80 3					82.3_156.8	19.3_156.8 ⛔ (22.6_38.5)	19.3_156.8 ⛔ (22.6_38.5)
A 80 4			354.0_1558	171.3_1558	171.3_1558	171.3_762.1	
A 90 3					98.6_151.0	55.0_151.0	55.0_151.0
A 90 4			449.2_1632	166.1_1632	166.1_1632	166.1_937.2	

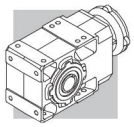

Motor adapters matching the most popular brands of servomotors are available for units size A05… A60. Dimensions of servomotor inputs are provided within the drawing section for each frame size. The code **SK** applies for inputs featuring a conventional keyway, while through the specification of the **SC** code the input shaft will feature a clamping device instead.

(C 41)

		SERVO INPUT					
		SK40A	SK60A	SK60B	SK80A	SK80B	SK80C
		SC40A	SC60A	SC60B	SC80A	SC80B	SC80C
A 05 2		5.5_91.6	5.5_91.6	5.5_51.3	5.5_51.3		
A 10 2			5.5_91.6	5.5_51.3	5.5_51.3		5.5_65.9
A 20 2			7.3_92.3 ⛔ (10.3)	7.3_63.1 ⛔ (10.3)	7.3_63.1 ⛔ (10.3)		5.4_79.9
A 20 3			109.2_380.9	109.2_380.9	109.2_380.9		109.2_380.9
A 30 2			9.3_97.5 ⛔ (10.5 ; 13.6_16.3)	9.3_76.5 ⛔ (10.5 ; 13.6_16.3)	9.3_76.5 ⛔ (10.5 ; 13.6_16.3)		5.4_97.5
A 30 3			109.1_400.8	109.1_400.8	109.1_400.8		109.1_400.8
A 35 2			9.3_95.6 ⛔ (13.1_20.4)	9.3_95.6 ⛔ (13.1_20.4)	9.3_95.6 ⛔ (13.1_20.4)		5.4_95.6
A 35 3			105.5_393.2	105.5_393.2	105.5_393.2		105.5_393.2
A 41 2	i =					11.7_79.2 ⛔ (13.8_17.8)	5.2_79.2
A 41 3			92.8_376.8	92.8_376.8	92.8_376.8		92.8_376.8
A 50 2						20.9	7.7_20.9
A 50 3						51.7_190.6	24.0_190.6
A 50 4							211.0_778.2
A 55 2							13.1_19.2
A 55 3						64.3_194.2	23.8_194.2
A 55 4							208.1_793.0
A 60 2							10.3_20.6
A 60 3							25.7_185.8
A 60 4						208.7_755.4	208.7_755.4

(C 42)

		SERVO INPUT								
		SK95A	SK95B	SK95C	SK110A	SK110B	SK130A	SK130B	SK180A	SK180B
		SC95A	SC95B	SC95C	SC110A	SC110B	SC130A	SC130B	SC180A	SC180B
A 10 2		5.5_51.3	5.5_65.9	5.5_65.9	5.5_65.9	5.5_65.9				
A 20 2		7.3_63.1 ⛔ (10.3)	5.4_79.9	5.4_79.9	5.4_79.9	5.4_79.9				
A 20 3		109.2_380.9	109.2_380.9	109.2_380.9	109.2_380.9	109.2_380.9				
A 30 2		9.3_76.5 ⛔ (10.5 ; 13.6_16.3)	5.4_97.5	5.4_97.5	5.4_97.5	5.4_97.5	5.4_97.5			
A 30 3		109.1_400.8	109.1_400.8	109.1_400.8	109.1_400.8	109.1_400.8				
A 35 2		9.3_95.6 ⛔ (13.1_20.4)	5.4_95.6	5.4_95.6	5.4_95.6	5.4_95.6	5.4_95.6			
A 35 3		105.5_393.2	105.5_393.2	105.5_393.2	105.5_393.2	105.5_393.2				
A 41 2	i =	11.7_79.2 ⛔ (13.8_17.8)	5.2_79.2	5.2_79.2	5.2_79.2	5.2_79.2	5.2_79.2	5.2_45.1	5.2_45.1	5.2_45.1
A 41 3		92.8_376.8	92.8_376.8	92.8_376.8	92.8_376.8	92.8_376.8				
A 50 2		20.9	7.7_20.9	7.7_20.9	7.7_20.9	7.7_20.9	7.7_20.9	7.7_20.9	7.7_20.9	7.7_20.9
A 50 3		51.7_190.6	24.0_190.6	24.0_190.6	24.0_190.6	24.0_190.6	24.0_190.6	24.0_109.4	24.0_109.4	24.0_109.4
A 50 4		211.0_778.2	211.0_778.2	211.0_778.2	211.0_778.2	211.0_778.2	211.0_778.2			
A 55 2			13.1_19.2	13.1_19.2	13.1_19.2	13.1_19.2	13.1_19.2	4.9_19.2	4.9_19.2	4.9_19.2
A 55 3		64.3_194.2	23.8_194.2	23.8_194.2	23.8_194.2	23.8_194.2	23.8_194.2	23.8_123.9	23.8_123.9	23.8_123.9
A 55 4		208.1_793.0	208.1_793.0	208.1_793.0	208.1_793.0	208.1_793.0	208.1_793.0			
A 60 2			10.3_20.6	10.3_20.6	10.3_20.6	10.3_20.6	10.3_20.6	7.9_20.6	7.9_20.6	7.9_20.6
A 60 3		65.0_185.8	25.7_185.8	25.7_185.8	25.7_185.8	25.7_185.8	25.7_185.8	25.7_133.3	25.7_133.3	25.7_133.3
A 60 4		208.7_755.4	208.7_755.4	208.7_755.4	208.7_755.4	208.7_755.4	208.7_755.4			

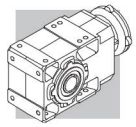

42 MOMENT OF INERTIA

The following charts indicate moment of inertia values J_r [kgm^2] referred to the gear unit high speed shaft. A key to the symbols used follows:



Values under this icon refer to compact gear units, without motor. To obtain the overall moment of inertia for the gearmotor just add the value of the inertia for the specific compact motor, given in the relevant rating chart.



Values under this symbol refer to gearboxes with IEC motor adaptor (IEC size...).

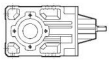

This symbol refers to gearbox values.



Values under this symbol refer to gear unit with servomotor input adapter.

A 05

	i	J (•10^{-4}) [kgm^2]				
			 IEC			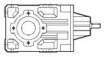
			63	71	80	
A 05 2_5.5	5.5	0.72	0.99	1.0	1.4	—
A 05 2_6.3	6.3	0.56	0.83	0.86	1.2	—
A 05 2_7.2	7.2	0.48	0.74	0.77	1.1	—
A 05 2_8.5	8.5	0.36	0.63	0.65	1.0	—
A 05 2_9.6	9.6	0.29	0.55	0.58	0.92	—
A 05 2_10.6	10.6	0.50	0.77	0.80	1.1	—
A 05 2_12.3	12.3	0.18	0.45	0.48	0.82	—
A 05 2_13.9	13.9	0.35	0.62	0.65	0.99	—
A 05 2_16.4	16.4	0.27	0.54	0.57	0.91	—
A 05 2_18.6	18.6	0.22	0.49	0.51	0.86	—
A 05 2_21.4	21.4	0.16	0.43	0.46	0.80	—
A 05 2_23.8	23.8	0.14	0.41	0.43	0.78	—
A 05 2_25.5	25.5	0.13	0.39	0.42	0.76	—
A 05 2_28.6	28.6	0.11	0.38	0.40	0.75	—
A 05 2_32.2	32.2	0.09	0.36	0.39	0.73	—
A 05 2_35.1	35.1	0.08	0.35	0.37	0.72	—
A 05 2_40.9	40.9	0.07	0.33	0.36	0.70	—
A 05 2_45.4	45.4	0.05	0.32	0.35	0.69	—
A 05 2_51.3	51.3	0.04	0.31	0.34	0.68	—
A 05 2_58.6	58.6	0.04	0.31	—	—	—
A 05 2_65.9	65.9	0.03	0.30	—	—	—
A 05 2_76.4	76.4	0.02	0.29	—	—	—
A 05 2_91.6	91.6	0.02	0.28	—	—	—

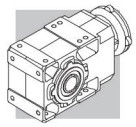

A 05

	i	J (•10-4) [kgm2]					
		SERVO					
		40A		60A		60B 80A	
		SK	SC	SK	SC	SK	SC
A 05 2_5.5	5.5	0.89	1.1	0.99	1.3	1.0	1.4
A 05 2_6.3	6.3	0.73	0.89	0.83	1.1	0.86	1.3
A 05 2_7.2	7.2	0.65	0.81	0.74	1.0	0.77	1.2
A 05 2_8.5	8.5	0.53	0.69	0.63	0.89	0.65	1.1
A 05 2_9.6	9.6	0.46	0.62	0.55	0.81	0.58	1.0
A 05 2_10.6	10.6	0.67	0.83	0.77	1.0	0.80	1.2
A 05 2_12.3	12.3	0.35	0.51	0.45	0.71	0.48	0.92
A 05 2_13.9	13.9	0.52	0.68	0.62	0.88	0.65	1.1
A 05 2_16.4	16.4	0.44	0.60	0.54	0.80	0.57	1.0
A 05 2_18.6	18.6	0.39	0.55	0.49	0.75	0.51	0.95
A 05 2_21.4	21.4	0.33	0.49	0.43	0.69	0.46	0.90
A 05 2_23.8	23.8	0.31	0.47	0.41	0.67	0.43	0.87
A 05 2_25.5	25.5	0.30	0.46	0.39	0.65	0.42	0.86
A 05 2_28.6	28.6	0.28	0.44	0.38	0.64	0.40	0.84
A 05 2_32.2	32.2	0.26	0.42	0.36	0.62	0.39	0.83
A 05 2_35.1	35.1	0.25	0.41	0.35	0.61	0.37	0.81
A 05 2_40.9	40.9	0.24	0.40	0.33	0.59	0.36	0.80
A 05 2_45.4	45.4	0.22	0.38	0.32	0.58	0.35	0.79
A 05 2_51.3	51.3	0.21	0.37	0.31	0.57	0.34	0.78
A 05 2_58.6	58.6	0.21	0.37	0.31	0.57	—	—
A 05 2_65.9	65.9	0.20	0.36	0.30	0.56	—	—
A 05 2_76.4	76.4	0.19	0.35	0.29	0.55	—	—
A 05 2_91.6	91.6	0.19	0.35	0.28	0.54	—	—

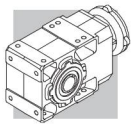

A 10

	i	J (•10^{-4}) [kgm^2]							
			IEC						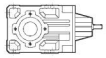
			63	71	80	90	100	112	
A 10 2_5.5	5.5	1.0	2.5	2.5	3.9	3.8	5.1	5.1	1.8
A 10 2_6.3	6.3	0.80	2.3	2.3	3.7	3.6	4.9	4.9	1.6
A 10 2_7.2	7.2	0.60	2.1	2.1	3.5	3.4	4.7	4.7	1.5
A 10 2_8.5	8.5	0.45	1.9	1.9	3.3	3.1	4.5	4.5	1.4
A 10 2_9.6	9.6	0.30	1.8	1.8	3.2	3.1	4.4	4.4	1.3
A 10 2_10.6	10.6	0.50	2.0	2.0	3.4	3.3	4.6	4.6	1.4
A 10 2_12.3	12.3	0.20	1.7	1.7	3.1	3.0	4.3	4.3	1.1
A 10 2_13.9	13.9	0.30	1.8	1.8	3.2	3.1	4.6	4.6	1.2
A 10 2_16.4	16.4	0.25	1.7	1.7	3.1	3.0	4.3	4.3	1.1
A 10 2_18.6	18.6	0.20	1.7	1.7	3.1	3.0	4.3	4.3	1.0
A 10 2_21.4	21.4	0.15	1.6	1.6	3.0	2.9	4.2	4.2	1.0
A 10 2_23.8	23.8	0.10	1.6	1.6	3.0	2.9	4.2	4.2	1.0
A 10 2_25.5	25.5	0.10	1.6	1.6	3.0	2.9	4.2	4.2	1.0
A 10 2_28.6	28.6	0.10	1.6	1.6	3.0	2.9	4.2	4.2	0.90
A 10 2_32.2	32.2	0.08	1.6	1.6	3.0	2.9	4.2	4.2	0.90
A 10 2_35.1	35.1	0.07	1.6	1.6	3.0	2.9	4.2	4.2	0.90
A 10 2_40.9	40.9	0.06	1.6	1.6	3.0	2.9	4.2	4.2	0.90
A 10 2_45.4	45.4	0.05	1.6	1.6	3.0	2.9	4.2	4.2	0.90
A 10 2_51.3	51.3	0.03	1.5	1.5	2.9	2.8	4.1	4.1	0.90
A 10 2_58.6	58.6	0.03	1.5	1.5	2.9	2.8	4.1	4.1	0.90
A 10 2_65.9	65.9	0.02	1.5	1.5	2.9	2.8	4.1	4.1	0.90
A 10 2_76.4	76.4	0.02	1.5	1.5	—	—	—	—	0.90
A 10 2_91.6	91.6	0.01	1.5	1.5	—	—	—	—	0.90

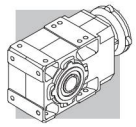

A 10

	i	J (•10^{-4}) [kgm^2]									
		SERVO									
		60A		60B 80A		95A		80C 95B 110A		95C 110B	
		SK	SC	SK	SC	SK	SC	SK	SC	SK	SC
A 10 2_5.5	5.5	1.3	1.5	1.3	1.7	3.8	4.3	3.9	4.4	3.8	4.8
A 10 2_6.3	6.3	1.1	1.3	1.1	1.5	3.6	4.1	3.7	4.2	3.6	4.6
A 10 2_7.2	7.2	0.87	1.1	0.89	1.3	3.4	3.9	3.5	4.0	3.4	4.4
A 10 2_8.5	8.5	0.72	0.98	0.74	1.2	3.3	3.7	3.3	3.8	3.1	4.1
A 10 2_9.6	9.6	0.57	0.83	0.59	1.0	3.1	3.6	3.2	3.7	3.1	4.1
A 10 2_10.6	10.6	0.77	1.0	0.79	1.2	3.3	3.8	3.4	3.9	3.3	4.3
A 10 2_12.3	12.3	0.47	0.73	0.49	0.93	3.0	3.5	3.1	3.6	3.0	4.0
A 10 2_13.9	13.9	0.57	0.83	0.59	1.0	3.1	3.6	3.2	3.7	3.1	4.1
A 10 2_16.4	16.4	0.52	0.78	0.54	0.98	3.1	3.5	3.1	3.6	3.0	4.0
A 10 2_18.6	18.6	0.47	0.73	0.49	0.93	3.0	3.5	3.1	3.6	3.0	4.0
A 10 2_21.4	21.4	0.42	0.68	0.44	0.88	3.0	3.4	3.0	3.5	2.9	3.9
A 10 2_23.8	23.8	0.37	0.63	0.39	0.83	2.9	3.4	3.0	3.5	2.9	3.9
A 10 2_25.5	25.5	0.37	0.63	0.39	0.83	2.9	3.4	3.0	3.5	2.9	3.9
A 10 2_28.6	28.6	0.37	0.63	0.39	0.83	2.9	3.4	3.0	3.5	2.9	3.9
A 10 2_32.2	32.2	0.35	0.61	0.37	0.81	2.9	3.3	3.0	3.5	2.9	3.9
A 10 2_35.1	35.1	0.34	0.60	0.36	0.80	2.9	3.3	3.0	3.5	2.9	3.9
A 10 2_40.9	40.9	0.33	0.59	0.35	0.79	2.9	3.3	3.0	3.5	2.9	3.9
A 10 2_45.4	45.4	0.32	0.58	0.34	0.78	2.9	3.3	3.0	3.5	2.9	3.9
A 10 2_51.3	51.3	0.30	0.56	0.32	0.76	2.9	3.3	2.9	3.4	2.8	3.8
A 10 2_58.6	58.6	0.30	0.56	—	—	—	—	2.9	3.4	2.8	3.8
A 10 2_65.9	65.9	0.29	0.55	—	—	—	—	2.9	3.4	2.8	3.8
A 10 2_76.4	76.4	0.29	0.55	—	—	—	—	—	—	—	—
A 10 2_91.6	91.6	0.28	0.54	—	—	—	—	—	—	—	—

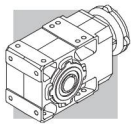

A 20

	i	J (•10-4) [kgm2]							
			IEC						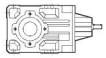
			63	71	80	90	100	112	
A 20 2_5.4	5.4	2.4	—	—	5.3	5.2	6.5	6.5	4.3
A 20 2_6.5	6.5	1.9	—	—	4.8	4.7	6.0	6.0	3.8
A 20 2_7.3	7.3	1.4	2.9	2.9	4.3	4.2	5.5	5.5	3.3
A 20 2_8.4	8.4	1.1	2.6	2.6	4.0	3.9	5.2	5.2	3.0
A 20 2_9.4	9.4	0.90	2.4	2.4	3.8	3.7	5.0	5.0	2.8
A 20 2_10.3	10.3	1.2	—	—	4.1	4.0	5.3	5.3	3.0
A 20 2_12.0	12.0	0.50	2.0	2.0	3.4	3.3	4.6	4.6	2.4
A 20 2_14.1	14.1	0.70	2.2	2.2	3.6	3.5	4.8	4.8	2.6
A 20 2_16.2	16.2	0.55	2.0	2.0	3.4	3.3	4.6	4.6	2.5
A 20 2_18.1	18.1	0.40	1.9	1.9	3.3	3.2	4.5	4.5	2.4
A 20 2_21.2	21.2	0.35	1.8	1.8	3.2	3.1	4.4	4.4	2.3
A 20 2_23.1	23.1	0.30	1.8	1.8	3.2	3.1	4.4	4.4	2.2
A 20 2_26.5	26.5	0.25	1.7	1.7	3.1	3.0	4.3	4.3	2.1
A 20 2_29.2	29.2	0.20	1.7	1.7	3.1	3.0	4.3	4.3	2.1
A 20 2_31.3	31.3	0.20	1.7	1.7	3.1	3.0	4.3	4.3	2.1
A 20 2_35.4	35.4	0.20	1.7	1.7	3.1	3.0	4.3	4.3	2.1
A 20 2_39.6	39.6	0.10	1.6	1.6	3.0	2.9	4.2	4.2	2.0
A 20 2_43.2	43.2	0.10	1.6	1.6	3.0	2.9	4.2	4.2	2.0
A 20 2_48.3	48.3	0.10	1.6	1.6	3.0	2.9	4.2	4.2	2.0
A 20 2_53.7	53.7	0.10	1.6	1.6	3.0	2.9	4.2	4.2	2.0
A 20 2_63.1	63.1	0.10	1.6	1.6	3.0	2.9	4.2	4.2	2.0
A 20 2_71.0	71.0	0.05	1.5	1.5	2.9	2.8	4.1	4.1	2.0
A 20 2_79.9	79.9	0.03	1.5	1.5	2.9	2.8	4.1	4.1	2.0
A 20 2_92.3	92.3	0.02	1.5	1.5	—	—	—	—	2.0
A 20 3_109.2	109.2	0.02	1.5	1.5	2.9	2.8	4.1	4.1	0.90
A 20 3_120.5	120.5	0.02	1.5	1.5	2.9	2.8	4.1	4.1	0.90
A 20 3_129.1	129.1	0.02	1.5	1.5	2.9	2.8	4.1	4.1	0.90
A 20 3_146.1	146.1	0.02	1.5	1.5	2.9	2.8	4.1	4.1	0.90
A 20 3_163.4	163.4	0.01	1.5	1.5	2.9	2.8	4.1	4.1	0.90
A 20 3_178.3	178.3	0.01	1.5	1.5	2.9	2.8	4.1	4.1	0.90
A 20 3_199.2	199.2	0.01	1.5	1.5	2.9	2.8	4.1	4.1	0.90
A 20 3_221.3	221.3	0.01	1.5	1.5	2.9	2.8	4.1	4.1	0.90
A 20 3_260.5	260.5	0.01	1.5	1.5	2.9	2.8	4.1	4.1	0.90
A 20 3_292.8	292.8	0.01	1.5	1.5	2.9	2.8	4.1	4.1	0.90
A 20 3_329.4	329.4	0.01	1.5	1.5	2.9	2.8	4.1	4.1	0.90
A 20 3_380.9	380.9	0.01	1.5	1.5	2.9	2.8	4.1	4.1	0.90

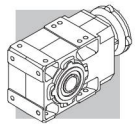

A 20

	i	J (•10-4) [kgm2]									
		SERVO									
		60A		60B 80A		95A		80C 95B 110A		95C 110B	
		SK	SC	SK	SC	SK	SC	SK	SC	SK	SC
A 20 2_5.4	5.4	—	—	—	—	—	—	5.3	5.8	5.2	6.2
A 20 2_6.5	6.5	—	—	—	—	—	—	4.8	5.3	4.7	5.7
A 20 2_7.3	7.3	1.7	1.9	1.7	2.1	4.2	4.7	4.3	4.8	4.2	5.2
A 20 2_8.4	8.4	1.4	1.6	1.4	1.8	3.9	4.6	4.0	4.5	3.9	4.9
A 20 2_9.4	9.4	1.2	1.4	1.2	1.6	3.7	4.2	3.8	4.3	3.7	4.7
A 20 2_10.3	10.3	—	—	—	—	—	—	4.1	4.6	4.0	5.0
A 20 2_12.0	12.0	0.77	1.0	0.79	1.2	3.3	3.8	3.4	3.9	3.3	4.3
A 20 2_14.1	14.1	0.97	1.2	0.99	1.4	3.5	4.0	3.6	4.1	3.5	4.5
A 20 2_16.2	16.2	0.82	1.1	0.84	1.3	3.4	3.8	3.4	3.9	3.3	4.3
A 20 2_18.1	18.1	0.67	0.93	0.69	1.1	3.2	3.7	3.3	3.8	3.2	4.2
A 20 2_21.2	21.2	0.62	0.88	0.64	1.1	3.2	3.6	3.2	3.7	3.1	4.1
A 20 2_23.1	23.1	0.57	0.83	0.59	1.0	3.1	3.6	3.2	3.7	3.1	4.1
A 20 2_26.5	26.5	0.52	0.78	0.54	0.98	3.1	3.5	3.1	3.6	3.0	4.0
A 20 2_29.2	29.2	0.47	0.73	0.49	0.93	3.0	3.5	3.1	3.6	3.0	4.0
A 20 2_31.3	31.3	0.47	0.73	0.49	0.93	3.0	3.5	3.1	3.6	3.0	4.0
A 20 2_35.4	35.4	0.47	0.73	0.49	0.93	3.0	3.5	3.1	3.6	3.0	4.0
A 20 2_39.6	39.6	0.37	0.63	0.39	0.83	2.9	3.4	3.0	3.5	2.9	3.9
A 20 2_43.2	43.2	0.37	0.63	0.39	0.83	2.9	3.4	3.0	3.5	2.9	3.9
A 20 2_48.3	48.3	0.37	0.63	0.39	0.83	2.9	3.4	3.0	3.5	2.9	3.9
A 20 2_53.7	53.7	0.37	0.63	0.39	0.83	2.9	3.4	3.0	3.5	2.9	3.9
A 20 2_63.1	63.1	0.37	0.63	0.39	0.83	2.9	3.4	3.0	3.5	2.9	3.9
A 20 2_71.0	71.0	0.32	0.58	—	—	—	—	2.9	3.4	2.8	3.8
A 20 2_79.9	79.9	0.30	0.56	—	—	—	—	2.9	3.4	2.8	3.8
A 20 2_92.3	92.3	0.29	0.55	—	—	—	—	—	—	—	—
A 20 3_109.2	109.2	0.29	0.55	0.31	0.75	2.8	3.3	2.9	3.4	2.8	3.8
A 20 3_120.5	120.5	0.29	0.55	0.31	0.75	2.8	3.3	2.9	3.4	2.8	3.8
A 20 3_129.1	129.1	0.29	0.55	0.31	0.75	2.8	3.3	2.9	3.4	2.8	3.8
A 20 3_146.1	146.1	0.29	0.55	0.31	0.75	2.8	3.3	2.9	3.4	2.8	3.8
A 20 3_163.4	163.4	0.28	0.54	0.30	0.74	2.8	3.3	2.9	3.4	2.8	3.8
A 20 3_178.3	178.3	0.28	0.54	0.30	0.74	2.8	3.3	2.9	3.4	2.8	3.8
A 20 3_199.2	199.2	0.28	0.54	0.30	0.74	2.8	3.3	2.9	3.4	2.8	3.8
A 20 3_221.3	221.3	0.28	0.54	0.30	0.74	2.8	3.3	2.9	3.4	2.8	3.8
A 20 3_260.5	260.5	0.28	0.54	0.30	0.74	2.8	3.3	2.9	3.4	2.8	3.8
A 20 3_292.8	292.8	0.28	0.54	0.30	0.74	2.8	3.3	2.9	3.4	2.8	3.8
A 20 3_329.4	329.4	0.28	0.54	0.30	0.74	2.8	3.3	2.9	3.4	2.8	3.8
A 20 3_380.9	380.9	0.28	0.54	0.30	0.74	2.8	3.3	2.9	3.4	2.8	3.8

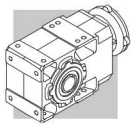

A 30

	i	J (•10-4) [kgm2]							
			IEC						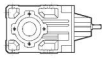
			63	71	80	90	100	112	
A 30 2_5.4	5.4	4.5	—	—	7.4	7.3	8.6	8.6	6.9
A 30 2_6.4	6.4	3.4	—	—	6.6	6.6	7.8	7.8	6.0
A 30 2_7.0	7.0	2.9	—	—	5.8	5.8	7.0	7.0	5.2
A 30 2_8.5	8.5	2.2	—	—	5.1	5.1	6.3	6.3	4.6
A 30 2_9.3	9.3	1.6	3.1	3.1	4.5	4.4	5.7	5.7	4.0
A 30 2_10.5	10.5	2.3	—	—	5.2	5.1	6.4	6.4	4.6
A 30 2_11.8	11.8	1.1	2.6	2.6	4.0	3.9	5.2	5.2	3.4
A 30 2_13.6	13.6	1.5	—	—	4.4	4.3	5.6	5.6	3.9
A 30 2_16.3	16.3	1.2	—	—	4.1	4.0	5.3	5.3	3.5
A 30 2_18.0	18.0	0.90	2.4	2.4	3.8	3.7	5.0	5.0	3.2
A 30 2_20.5	20.5	0.70	2.2	2.2	3.6	3.5	4.8	4.8	3.1
A 30 2_22.8	22.8	0.60	2.1	2.1	3.5	3.4	4.7	4.7	3.0
A 30 2_26.5	26.5	0.50	2.0	2.0	3.4	3.3	4.6	4.6	2.9
A 30 2_29.3	29.3	0.40	1.9	1.9	3.3	3.2	4.5	4.5	2.8
A 30 2_33.4	33.4	0.35	1.8	1.8	3.2	3.1	4.4	4.4	2.7
A 30 2_36.6	36.6	0.30	1.8	1.8	3.2	3.1	4.4	4.4	2.7
A 30 2_39.3	39.3	0.25	1.7	1.7	3.1	3.0	4.3	4.3	2.6
A 30 2_43.4	43.4	0.20	1.7	1.7	3.1	3.0	4.3	4.3	2.6
A 30 2_48.3	48.3	0.20	1.7	1.7	3.1	3.0	4.3	4.3	2.6
A 30 2_52.7	52.7	0.20	1.7	1.7	3.1	3.0	4.3	4.3	2.5
A 30 2_59.4	59.4	0.10	1.6	1.6	3.0	2.9	4.2	4.2	2.5
A 30 2_66.0	66.0	0.10	1.6	1.6	3.0	2.9	4.2	4.2	2.5
A 30 2_76.5	76.5	0.10	1.6	1.6	3.0	2.9	4.2	4.2	2.5
A 30 2_86.7	86.7	0.10	1.6	1.6	3.0	2.9	4.2	4.2	2.5
A 30 2_97.5	97.5	0.10	1.6	1.6	3.0	2.9	4.2	4.2	2.4
A 30 3_109.1	109.1	0.10	1.6	1.6	3.0	2.9	4.2	4.2	0.90
A 30 3_120.5	120.5	0.10	1.6	1.6	3.0	2.9	4.2	4.2	0.90
A 30 3_137.4	137.4	0.10	1.6	1.6	3.0	2.9	4.2	4.2	0.90
A 30 3_150.7	150.7	0.10	1.6	1.6	3.0	2.9	4.2	4.2	0.90
A 30 3_161.4	161.4	0.10	1.6	1.6	3.0	2.9	4.2	4.2	0.90
A 30 3_178.5	178.5	0.10	1.6	1.6	3.0	2.9	4.2	4.2	0.90
A 30 3_198.5	198.5	0.10	1.6	1.6	3.0	2.9	4.2	4.2	0.90
A 30 3_216.6	216.6	0.10	1.6	1.6	3.0	2.9	4.2	4.2	0.90
A 30 3_244.3	244.3	0.10	1.6	1.6	3.0	2.9	4.2	4.2	0.90
A 30 3_271.5	271.5	0.10	1.6	1.6	3.0	2.9	4.2	4.2	0.90
A 30 3_314.5	314.5	0.10	1.6	1.6	3.0	2.9	4.2	4.2	0.90
A 30 3_356.3	356.3	0.06	1.6	1.6	3.0	2.9	4.2	4.2	0.90
A 30 3_400.8	400.8	0.04	1.5	1.6	2.9	2.8	4.1	4.1	0.90

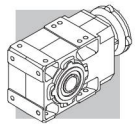

A 30

	i	J (•10-4) [kgm2]											
		SERVO											
		60A		60B 80A		95A		80C 95B 110A		95C 110B		130A	
		SK	SC	SK	SC	SK	SC	SK	SC	SK	SC	SK	SC
A 30 2_5.4	5.4	—	—	—	—	—	—	7.4	7.9	7.3	8.3	7.3	8.3
A 30 2_6.4	6.4	—	—	—	—	—	—	6.6	7.1	6.6	7.6	6.6	7.6
A 30 2_7.0	7.0	—	—	—	—	—	—	5.8	6.3	5.8	6.8	5.8	6.8
A 30 2_8.5	8.5	—	—	—	—	—	—	5.1	5.6	5.1	6.1	5.1	6.1
A 30 2_9.3	9.3	1.9	2.1	1.9	2.3	4.4	4.9	4.5	5.0	4.4	5.4	4.4	5.4
A 30 2_10.5	10.5	—	—	—	—	—	—	5.2	5.7	5.1	6.1	5.1	6.1
A 30 2_11.8	11.8	1.4	1.6	1.4	1.8	3.9	4.4	4.0	4.5	3.9	4.9	3.9	4.9
A 30 2_13.6	13.6	—	—	—	—	—	—	4.4	4.9	4.3	5.3	4.3	5.3
A 30 2_16.3	16.3	—	—	—	—	—	—	4.1	4.6	4.0	5.0	4.0	5.0
A 30 2_18.0	18.0	1.2	1.4	1.2	1.6	3.7	4.2	3.8	4.3	3.7	4.7	3.7	4.7
A 30 2_20.5	20.5	0.97	1.2	0.99	1.4	3.5	4.0	3.6	4.1	3.5	4.5	3.5	4.5
A 30 2_22.8	22.8	0.87	1.1	0.89	1.3	3.4	3.9	3.5	4.0	3.4	4.4	3.4	4.4
A 30 2_26.5	26.5	0.77	1.0	0.79	1.2	3.3	3.8	3.4	3.9	3.3	4.3	3.3	4.3
A 30 2_29.3	29.3	0.67	0.93	0.69	1.1	3.2	3.7	3.3	3.8	3.2	4.2	3.2	4.2
A 30 2_33.4	33.4	0.62	0.88	0.64	1.1	3.2	3.6	3.2	3.7	3.1	4.1	3.1	4.1
A 30 2_36.6	36.6	0.57	0.83	0.59	1.0	3.1	3.6	3.2	3.7	3.1	4.1	3.1	4.1
A 30 2_39.3	39.3	0.52	0.78	0.54	0.98	3.1	3.5	3.1	3.6	3.0	4.0	3.0	4.0
A 30 2_43.4	43.4	0.47	0.73	0.49	0.93	3.0	3.5	3.1	3.6	3.0	4.0	3.0	4.0
A 30 2_48.3	48.3	0.47	0.73	0.49	0.93	3.0	3.5	3.1	3.6	3.0	4.0	3.0	4.0
A 30 2_52.7	52.7	0.47	0.73	0.49	0.93	3.0	3.5	3.1	3.6	3.0	4.0	3.0	4.0
A 30 2_59.4	59.4	0.37	0.63	0.39	0.83	2.9	3.4	3.0	3.5	2.9	3.9	2.9	3.9
A 30 2_66.0	66.0	0.37	0.63	0.39	0.83	2.9	3.4	3.0	3.5	2.9	3.9	2.9	3.9
A 30 2_76.5	76.5	0.37	0.63	0.39	0.83	2.9	3.4	3.0	3.5	2.9	3.9	2.9	3.9
A 30 2_86.7	86.7	0.37	0.63	—	—	—	—	3.0	3.5	2.9	3.9	2.9	3.9
A 30 2_97.5	97.5	0.37	0.63	—	—	—	—	3.0	3.5	2.9	3.9	2.9	3.9
A 30 3_109.1	109.1	0.37	0.63	0.39	0.83	2.9	3.4	3.0	3.5	2.9	3.9	—	—
A 30 3_120.5	120.5	0.37	0.63	0.39	0.83	2.9	3.4	3.0	3.5	2.9	3.9	—	—
A 30 3_137.4	137.4	0.37	0.63	0.39	0.83	2.9	3.4	3.0	3.5	2.9	3.9	—	—
A 30 3_150.7	150.7	0.37	0.63	0.39	0.83	2.9	3.4	3.0	3.5	2.9	3.9	—	—
A 30 3_161.4	161.4	0.37	0.63	0.39	0.83	2.9	3.4	3.0	3.5	2.9	3.9	—	—
A 30 3_178.5	178.5	0.37	0.63	0.39	0.83	2.9	3.4	3.0	3.5	2.9	3.9	—	—
A 30 3_198.5	198.5	0.37	0.63	0.39	0.83	2.9	3.4	3.0	3.5	2.9	3.9	—	—
A 30 3_216.6	216.6	0.37	0.63	0.39	0.83	2.9	3.4	3.0	3.5	2.9	3.9	—	—
A 30 3_244.3	244.3	0.37	0.63	0.39	0.83	2.9	3.4	3.0	3.5	2.9	3.9	—	—
A 30 3_271.5	271.5	0.37	0.63	0.39	0.83	2.9	3.4	3.0	3.5	2.9	3.9	—	—
A 30 3_314.5	314.5	0.37	0.63	0.39	0.83	2.9	3.4	3.0	3.5	2.9	3.9	—	—
A 30 3_356.3	356.3	0.33	0.59	0.35	0.79	2.9	3.3	3.0	3.5	2.9	3.9	—	—
A 30 3_400.8	400.8	0.31	0.57	0.33	0.77	2.9	3.3	2.9	3.4	2.8	3.8	—	—

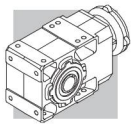

A 35

	i	J (•10-4) [kgm2]								
			IEC							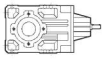
			63	71	80	90	100	112	132	
A 35 2_5.4	5.4	7.3	—	—	10	9.9	11	11	24	9.4
A 35 2_6.4	6.4	5.4	—	—	8.1	8.0	9.2	9.2	22	7.4
A 35 2_7.0	7.0	4.6	—	—	7.3	7.2	8.4	8.4	21	6.6
A 35 2_8.5	8.5	3.3	—	—	6.1	5.9	7.1	7.1	20	5.4
A 35 2_9.3	9.3	2.8	3.5	3.5	5.6	5.4	6.6	6.6	19	4.9
A 35 2_10.6	10.6	2.1	2.9	2.9	4.9	4.8	6.0	6.0	19	4.2
A 35 2_11.8	11.8	1.8	2.5	2.5	4.6	4.4	5.7	5.7	18	3.9
A 35 2_13.1	13.1	3.0	—	—	5.7	5.6	6.8	6.8	—	5.0
A 35 2_15.5	15.5	2.2	—	—	5.0	4.9	6.1	6.1	—	4.3
A 35 2_17.0	17.0	2.0	—	—	4.7	4.6	5.8	5.8	—	4.0
A 35 2_20.4	20.4	1.6	—	—	4.3	4.2	5.4	5.4	—	3.6
A 35 2_22.5	22.5	1.3	2.0	2.0	4.1	3.9	5.1	5.1	—	3.4
A 35 2_25.7	25.7	0.97	1.7	1.7	3.7	3.6	4.8	4.8	—	3.0
A 35 2_28.4	28.4	0.86	1.6	1.6	3.6	3.5	4.7	4.7	—	2.9
A 35 2_33.2	33.2	0.69	1.4	1.4	3.5	3.3	4.5	4.5	—	2.8
A 35 2_36.6	36.6	0.58	1.3	1.3	3.3	3.2	4.4	4.4	—	2.6
A 35 2_41.8	41.8	0.48	1.2	1.2	3.2	3.1	4.3	4.3	—	2.5
A 35 2_45.8	45.8	0.42	1.1	1.1	3.2	3.1	4.3	4.3	—	2.5
A 35 2_49.1	49.1	0.38	1.1	1.1	3.1	3.0	4.2	4.2	—	2.4
A 35 2_54.3	54.3	0.33	1.1	1.0	3.1	3.0	4.2	4.2	—	2.4
A 35 2_60.4	60.4	0.29	1.0	1.0	3.0	2.9	4.1	4.1	—	2.3
A 35 2_65.8	65.8	0.25	1.0	1.0	3.0	2.9	4.1	4.1	—	2.3
A 35 2_74.3	74.3	0.21	0.95	0.93	3.0	2.8	4.1	4.1	—	2.3
A 35 2_82.5	82.5	0.18	0.92	0.90	2.9	2.8	4.0	4.0	—	2.2
A 35 2_95.6	95.6	0.15	0.88	0.87	2.9	2.8	4.0	4.0	—	2.2
A 35 3_105.5	105.5	0.11	0.89	0.87	2.9	2.8	4.0	4.0	—	0.80
A 35 3_116.9	116.9	0.11	0.88	0.87	2.9	2.8	4.0	4.0	—	0.79
A 35 3_136.3	136.3	0.10	0.87	0.86	2.9	2.8	4.0	4.0	—	0.78
A 35 3_150.6	150.6	0.09	0.86	0.85	2.9	2.8	4.0	4.0	—	0.77
A 35 3_171.8	171.8	0.08	0.86	0.84	2.9	2.8	4.0	4.0	—	0.77
A 35 3_188.3	188.3	0.08	0.85	0.84	2.9	2.7	4.0	4.0	—	0.76
A 35 3_201.8	201.8	0.08	0.85	0.84	2.9	2.7	4.0	4.0	—	0.76
A 35 3_223.2	223.2	0.08	0.85	0.84	2.9	2.7	4.0	4.0	—	0.76
A 35 3_248.1	248.1	0.07	0.85	0.83	2.9	2.7	4.0	4.0	—	0.76
A 35 3_270.7	270.7	0.07	0.84	0.83	2.9	2.7	4.0	4.0	—	0.75
A 35 3_305.4	305.4	0.07	0.84	0.83	2.9	2.7	4.0	4.0	—	0.75
A 35 3_339.3	339.3	0.07	0.84	0.83	2.9	2.7	4.0	4.0	—	0.75
A 35 3_393.2	393.2	0.07	0.84	0.83	2.9	2.7	3.9	3.9	—	0.75

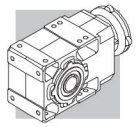

A 35

	i	J (•10-4) [kgm2]											
		SERVO											
		60A		60B 80A		95A		80C 95B 110A		95C 110B		130A	
		SK	SC	SK	SC	SK	SC	SK	SC	SK	SC	SK	SC
A 35 2_5.4	5.4	—	—	—	—	—	—	10	11	9.9	10.9	9.9	11
A 35 2_6.4	6.4	—	—	—	—	—	—	8.1	8.6	8.0	9.0	8.0	9.0
A 35 2_7.0	7.0	—	—	—	—	—	—	7.3	7.8	7.2	8.2	7.2	8.2
A 35 2_8.5	8.5	—	—	—	—	—	—	6.1	6.6	5.9	6.9	5.9	6.9
A 35 2_9.3	9.3	3.1	3.3	3.1	3.5	5.6	6.1	5.6	6.1	5.4	6.4	5.4	6.4
A 35 2_10.6	10.6	2.4	2.6	2.4	2.8	4.9	5.4	4.9	5.4	4.8	5.8	4.8	5.8
A 35 2_11.8	11.8	2.1	2.3	2.1	2.5	4.6	5.1	4.6	5.1	4.4	5.4	4.4	5.4
A 35 2_13.1	13.1	—	—	—	—	—	—	5.7	6.2	5.6	6.6	5.6	6.6
A 35 2_15.5	15.5	—	—	—	—	—	—	5.0	5.5	4.9	5.9	4.9	5.9
A 35 2_17.0	17.0	—	—	—	—	—	—	4.7	5.2	4.6	5.6	4.6	5.6
A 35 2_20.4	20.4	—	—	—	—	—	—	4.3	4.8	4.2	5.2	4.2	5.2
A 35 2_22.5	22.5	1.6	1.8	1.6	2.0	4.1	4.6	4.1	4.6	3.9	4.9	3.9	4.9
A 35 2_25.7	25.7	1.2	1.5	1.3	1.7	3.8	4.2	3.7	4.2	3.6	4.6	3.6	4.6
A 35 2_28.4	28.4	1.1	1.4	1.2	1.6	3.7	4.1	3.6	4.1	3.5	4.5	3.5	4.5
A 35 2_33.2	33.2	0.96	1.2	0.98	1.4	3.5	3.9	3.5	4.0	3.3	4.3	3.3	4.3
A 35 2_36.6	36.6	0.85	1.1	0.87	1.3	3.4	3.8	3.3	3.8	3.2	4.2	3.2	4.2
A 35 2_41.8	41.8	0.75	1.0	0.77	1.2	3.3	3.7	3.2	3.7	3.1	4.1	3.1	4.1
A 35 2_45.8	45.8	0.69	0.95	0.71	1.1	3.2	3.7	3.2	3.7	3.1	4.1	3.1	4.1
A 35 2_49.1	49.1	0.65	0.91	0.67	1.1	3.2	3.6	3.1	3.6	3.0	4.0	3.0	4.0
A 35 2_54.3	54.3	0.60	0.86	0.62	1.1	3.2	3.6	3.1	3.6	3.0	4.0	3.0	4.0
A 35 2_60.4	60.4	0.56	0.82	0.58	1.0	3.1	3.5	3.0	3.5	2.9	3.9	2.9	3.9
A 35 2_65.8	65.8	0.52	0.78	0.54	0.98	3.1	3.5	3.0	3.5	2.9	3.9	2.9	3.9
A 35 2_74.3	74.3	0.48	0.74	0.50	0.94	3.0	3.5	3.0	3.5	2.8	3.8	2.8	3.8
A 35 2_82.5	82.5	0.45	0.71	0.47	0.91	3.0	3.4	2.9	3.4	2.8	3.8	2.8	3.8
A 35 2_95.6	95.6	0.42	0.68	0.44	0.88	3.0	3.4	2.9	3.4	2.8	3.8	2.8	3.8
A 35 3_105.5	105.5	0.38	0.64	0.40	0.84	2.9	3.4	2.9	3.4	2.8	3.8	—	—
A 35 3_116.9	116.9	0.38	0.64	0.40	0.84	2.9	3.4	2.9	3.4	2.8	3.8	—	—
A 35 3_136.3	136.3	0.37	0.63	0.39	0.83	2.9	3.4	2.9	3.4	2.8	3.8	—	—
A 35 3_150.6	150.6	0.36	0.62	0.38	0.82	2.9	3.3	2.9	3.4	2.8	3.8	—	—
A 35 3_171.8	171.8	0.35	0.61	0.37	0.81	2.9	3.3	2.9	3.4	2.8	3.8	—	—
A 35 3_188.3	188.3	0.35	0.61	0.37	0.81	2.9	3.3	2.9	3.4	2.7	3.7	—	—
A 35 3_201.8	201.8	0.35	0.61	0.37	0.81	2.9	3.3	2.9	3.4	2.7	3.7	—	—
A 35 3_223.2	223.2	0.35	0.61	0.37	0.81	2.9	3.3	2.9	3.4	2.7	3.7	—	—
A 35 3_248.1	248.1	0.34	0.60	0.36	0.80	2.9	3.3	2.9	3.4	2.7	3.7	—	—
A 35 3_270.7	270.7	0.34	0.60	0.36	0.80	2.9	3.3	2.9	3.4	2.7	3.7	—	—
A 35 3_305.4	305.4	0.34	0.60	0.36	0.80	2.9	3.3	2.9	3.4	2.7	3.7	—	—
A 35 3_339.3	339.3	0.34	0.60	0.36	0.80	2.9	3.3	2.9	3.4	2.7	3.7	—	—
A 35 3_393.2	393.2	0.34	0.60	0.36	0.80	2.9	3.3	2.9	3.4	2.7	3.7	—	—

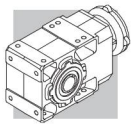

A 41

	i	J (•10-4) [kgm2]								
			IEC							
			63	71	80	90	100	112	132	
A 41 2_5.2	5.2	13	—	—	16	16	17	17	32	23
A 41 2_7.1	7.1	7.3	—	—	10	10	11	11	26	18
A 41 2_8.3	8.3	5.9	—	—	8.8	8.7	10	10	25	16
A 41 2_9.2	9.2	4.5	—	—	7.4	7.3	8.6	8.6	23	15
A 41 2_10.1	10.1	5.9	—	—	8.8	8.7	10	10	25	16
A 41 2_11.7	11.7	2.9	4.4	4.4	5.8	5.7	7.0	7.0	22	13
A 41 2_13.8	13.8	3.6	—	—	6.5	6.4	7.7	7.7	23	14
A 41 2_16.1	16.1	2.9	—	—	5.8	5.7	7.0	7.0	22	13
A 41 2_17.8	17.8	2.2	—	—	5.1	5.0	6.3	6.3	21	11
A 41 2_22.7	22.7	1.5	3.0	3.0	4.4	4.3	5.6	5.6	20	11
A 41 2_28.3	28.3	1.1	2.6	2.6	4.0	3.9	5.2	5.2	20	10
A 41 2_35.9	35.9	1.7	3.2	3.2	4.6	4.5	5.8	5.8	20	9.8
A 41 2_45.1	45.1	1.5	3.0	3.0	4.4	4.3	5.6	5.6	20	9.6
A 41 2_48.3	48.3	1.4	2.9	2.9	4.3	4.2	5.5	5.5	—	9.5
A 41 2_53.1	53.1	1.4	2.9	2.9	4.3	4.2	5.5	5.5	—	9.5
A 41 2_58.8	58.8	1.3	2.8	2.8	4.2	4.1	5.4	5.4	—	9.4
A 41 2_64.2	64.2	1.3	2.8	2.8	4.2	4.1	5.4	5.4	—	9.4
A 41 2_71.3	71.3	1.2	2.7	2.7	4.1	4.0	5.3	5.3	—	9.3
A 41 2_79.2	79.2	1.2	2.7	2.7	4.1	4.0	5.3	5.3	—	9.3
A 41 3_92.8	92.8	1.1	2.6	2.6	4.0	3.9	5.2	5.2	—	9.2
A 41 3_115.9	115.9	0.20	1.7	1.7	2.9	3.0	4.3	4.3	—	2.1
A 41 3_146.9	146.9	0.10	1.6	1.6	2.8	2.9	4.2	4.2	—	2.1
A 41 3_184.4	184.4	0.10	1.6	1.6	2.8	2.9	4.2	4.2	—	2.1
A 41 3_197.5	197.5	0.10	1.6	1.6	2.8	2.9	4.2	4.2	—	2.0
A 41 3_217.4	217.4	0.10	1.6	1.6	2.8	2.9	4.2	4.2	—	2.0
A 41 3_240.6	240.6	0.10	1.6	1.6	2.8	2.9	4.2	4.2	—	2.0
A 41 3_262.5	262.5	0.10	1.6	1.6	2.8	2.9	4.2	4.2	—	2.0
A 41 3_291.7	291.7	0.10	1.6	1.6	2.8	2.9	4.2	4.2	—	2.0
A 41 3_324.2	324.2	0.10	1.6	1.6	2.8	2.9	4.2	4.2	—	2.0
A 41 3_376.8	376.8	0.10	1.6	1.6	2.8	2.9	4.2	4.2	—	2.0

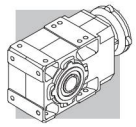

A 41

	i	J (•10-4) [kgm2] SERVO																	
		60A		60B 80A		80B		95A		80C 95B 110A		95C 110B		130A		130B 180A		180B	
		SK	SC	SK	SC	SK	SC	SK	SC	SK	SC	SK	SC	SK	SC	SK	SC	SK	SC
A 41 2_5.2	5.2	—	—	—	—	—	—	—	—	16	16.5	16	17	16	17	30	32	32	37
A 41 2_7.1	7.1	—	—	—	—	—	—	—	—	10	10.5	10	11	10	11	24	27	26	31
A 41 2_8.3	8.3	—	—	—	—	—	—	—	—	8.8	9.3	8.7	9.7	8.7	9.7	23	25	25	30
A 41 2_9.2	9.2	—	—	—	—	—	—	—	—	7.4	7.9	7.3	8.3	7.3	8.3	21	24	23	28
A 41 2_10.1	10.1	—	—	—	—	—	—	—	—	8.8	9.3	8.7	9.7	8.7	9.7	23	25	25	30
A 41 2_11.7	11.7	—	—	—	—	5.7	6.2	5.7	6.2	5.8	6.3	5.7	6.7	5.7	6.7	20	22	22	27
A 41 2_13.8	13.8	—	—	—	—	—	—	—	—	6.5	7.0	6.4	7.4	6.4	7.4	21	23	23	28
A 41 2_16.1	16.1	—	—	—	—	—	—	—	—	5.8	6.3	5.7	6.7	5.7	6.7	20	22	22	27
A 41 2_17.8	17.8	—	—	—	—	—	—	—	—	5.1	5.6	5.0	6.0	5.0	6.0	19	22	21	26
A 41 2_22.7	22.7	—	—	—	—	4.3	4.8	4.3	4.8	4.4	4.9	4.3	5.3	4.3	5.3	18	21	20	25
A 41 2_28.3	28.3	—	—	—	—	3.9	4.4	3.9	4.4	4.0	4.5	3.9	4.9	3.9	4.9	18	21	20	25
A 41 2_35.9	35.9	—	—	—	—	4.5	5.0	4.5	5.0	4.6	5.1	4.5	5.5	4.5	5.5	19	21	20	25
A 41 2_45.1	45.1	—	—	—	—	4.3	4.8	4.3	4.8	4.4	4.9	4.3	5.3	4.3	5.3	18	21	20	25
A 41 2_48.3	48.3	—	—	—	—	4.2	4.7	4.2	4.7	4.3	4.8	4.2	5.2	4.2	5.2	—	—	—	—
A 41 2_53.1	53.1	—	—	—	—	4.2	4.7	4.2	4.7	4.3	4.8	4.2	5.2	4.2	5.2	—	—	—	—
A 41 2_58.8	58.8	—	—	—	—	4.1	4.6	4.1	4.6	4.2	4.7	4.1	5.1	4.1	5.1	—	—	—	—
A 41 2_64.2	64.2	—	—	—	—	4.1	4.6	4.1	4.6	4.2	4.7	4.1	5.1	4.1	5.1	—	—	—	—
A 41 2_71.3	71.3	—	—	—	—	4.0	4.5	4.0	4.5	4.1	4.6	4.0	5.0	4.0	5.0	—	—	—	—
A 41 2_79.2	79.2	—	—	—	—	4.0	4.5	4.0	4.5	4.1	4.6	4.0	5.0	4.0	5.0	—	—	—	—
A 41 3_92.8	92.8	1.4	1.6	1.4	1.8	—	—	3.9	4.4	4.0	4.5	3.9	4.9	—	—	—	—	—	—
A 41 3_115.9	115.9	0.47	0.73	0.49	0.93	—	—	3.0	3.5	2.9	3.4	3.0	4.0	—	—	—	—	—	—
A 41 3_146.9	146.9	0.37	0.63	0.39	0.83	—	—	2.9	3.4	2.8	3.3	2.9	3.9	—	—	—	—	—	—
A 41 3_184.4	184.4	0.37	0.63	0.39	0.83	—	—	2.9	3.4	2.8	3.3	2.9	3.9	—	—	—	—	—	—
A 41 3_197.5	197.5	0.37	0.63	0.39	0.83	—	—	2.9	3.4	2.8	3.3	2.9	3.9	—	—	—	—	—	—
A 41 3_217.4	217.4	0.37	0.63	0.39	0.83	—	—	2.9	3.4	2.8	3.3	2.9	3.9	—	—	—	—	—	—
A 41 3_240.6	240.6	0.37	0.63	0.39	0.83	—	—	2.9	3.4	2.8	3.3	2.9	3.9	—	—	—	—	—	—
A 41 3_262.5	262.5	0.37	0.63	0.39	0.83	—	—	2.9	3.4	2.8	3.3	2.9	3.9	—	—	—	—	—	—
A 41 3_291.7	291.7	0.37	0.63	0.39	0.83	—	—	2.9	3.4	2.8	3.3	2.9	3.9	—	—	—	—	—	—
A 41 3_324.2	324.2	0.37	0.63	0.39	0.83	—	—	2.9	3.4	2.8	3.3	2.9	3.9	—	—	—	—	—	—
A 41 3_376.8	376.8	0.37	0.63	0.39	0.83	—	—	2.9	3.4	2.8	3.3	2.9	3.9	—	—	—	—	—	—

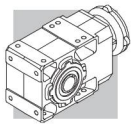

A 50

	i	J (•10-4) [kgm2]										
			IEC									
			63	71	80	90	100	112	132	160	180	
A 50 2_7.7	7.7	15	—	—	18	18	19	19	34	93	91	24
A 50 2_9.7	9.7	10	—	—	13	13	14	14	29	89	86	19
A 50 2_13.1	13.1	6.3	—	—	9.2	9.1	10	10	25	85	82	15
A 50 2_16.6	16.6	4.2	—	—	7.0	7.0	8.2	8.2	23	82	80	13
A 50 2_20.9	20.9	2.8	4.2	4.2	5.7	5.6	6.9	6.9	22	81	79	12
A 50 3_24.0	24.0	6.0	—	—	8.9	8.8	10	10	25	84	82	15
A 50 3_26.4	26.4	5.8	—	—	8.7	8.6	9.9	9.9	25	84	82	15
A 50 3_32.4	32.4	4.0	—	—	6.8	6.8	8.1	8.1	23	82	80	13
A 50 3_35.6	35.6	3.9	—	—	6.7	6.7	8.0	8.0	23	82	80	13
A 50 3_40.9	40.9	2.7	—	—	5.6	5.5	6.8	6.8	22	81	79	12
A 50 3_45.0	45.0	2.6	—	—	5.5	5.4	6.7	6.7	22	81	79	12
A 50 3_51.7	51.7	1.9	3.4	3.4	4.7	4.7	6.0	6.0	21	80	78	11
A 50 3_56.8	56.8	1.9	3.3	3.3	4.7	4.6	5.9	5.9	21	80	78	11
A 50 3_63.9	63.9	1.4	2.9	2.8	4.2	4.2	5.5	5.5	20	80	77	11
A 50 3_70.2	70.2	1.4	2.8	2.8	4.2	4.1	5.4	5.4	20	80	77	10
A 50 3_81.5	81.5	0.90	2.4	2.4	3.8	3.7	5.0	5.0	20	79	77	10
A 50 3_89.5	89.5	0.90	2.4	2.4	3.7	3.7	5.0	5.0	20	79	77	10
A 50 3_99.5	99.5	0.60	2.1	2.1	3.5	3.4	4.7	4.7	20	79	77	9.7
A 50 3_109.4	109.4	0.60	2.1	2.1	3.5	3.4	4.7	4.7	20	79	77	9.7
A 50 3_118.0	118.0	0.50	2.0	2.0	3.4	3.3	4.6	4.6	—	—	—	9.6
A 50 3_129.7	129.7	0.50	2.0	2.0	3.4	3.3	4.6	4.6	—	—	—	9.6
A 50 3_140.6	140.6	0.40	1.8	1.8	3.2	3.2	4.4	4.4	—	—	—	9.4
A 50 3_154.6	154.6	0.40	1.8	1.8	3.2	3.2	4.4	4.4	—	—	—	9.4
A 50 3_173.4	173.4	0.30	1.7	1.7	3.1	3.0	4.3	4.3	—	—	—	9.3
A 50 3_190.6	190.6	0.20	1.7	1.7	3.1	3.0	4.3	4.3	—	—	—	9.3

For the values of the moment of inertia of 4-stage gearboxes, please contact our Technical Service department.

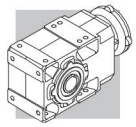

A 50

	i	J (•10-4) [kgm2]									
		SERVO									
		80B 95A		80C 95B 110A		95C 110B 130A		130B 180A		180B	
		SK	SC	SK	SC	SK	SC	SK	SC	SK	SC
A 50 2_7.7	7.7	—	—	18	19	18	19	32	34	34	39
A 50 2_9.7	9.7	—	—	13	14	13	14	27	29	29	34
A 50 2_13.1	13.1	—	—	9.2	9.7	9.1	10	23	26	25	30
A 50 2_16.6	16.6	—	—	7.0	7.5	7.0	8.0	21	24	23	28
A 50 2_20.9	20.9	5.6	6.1	5.7	6.2	5.6	6.6	20	22	22	27
A 50 3_24.0	24.0	—	—	8.9	9.4	8.8	9.8	23	25	25	30
A 50 3_26.4	26.4	—	—	8.7	9.2	8.6	9.6	23	25	25	30
A 50 3_32.4	32.4	—	—	6.8	7.3	6.8	7.8	21	23	23	28
A 50 3_35.6	35.6	—	—	6.7	7.2	6.7	7.7	21	23	23	28
A 50 3_40.9	40.9	—	—	5.6	6.1	5.5	6.5	20	22	22	27
A 50 3_45.0	45.0	—	—	5.5	6.0	5.4	6.4	20	22	22	27
A 50 3_51.7	51.7	4.7	5.1	4.7	5.2	4.7	5.7	19	21	21	26
A 50 3_56.8	56.8	4.7	5.1	4.7	5.2	4.6	5.6	19	21	21	26
A 50 3_63.9	63.9	4.2	4.7	4.2	5.2	4.2	5.2	18	21	20	25
A 50 3_70.2	70.2	4.2	4.7	4.2	5.2	4.1	5.1	18	21	20	25
A 50 3_81.5	81.5	3.7	4.1	3.8	4.3	3.7	4.7	18	20	20	25
A 50 3_89.5	89.5	3.7	4.1	3.7	4.2	3.7	4.7	18	20	20	25
A 50 3_99.5	99.5	3.4	3.9	3.5	4.0	3.4	4.4	18	20	20	25
A 50 3_109.4	109.4	3.4	3.9	3.5	4.0	3.4	4.4	18	20	20	25
A 50 3_118.0	118.0	3.3	3.8	3.4	4.0	3.3	4.3	—	—	—	—
A 50 3_129.7	129.7	3.3	3.8	3.4	4.0	3.3	4.3	—	—	—	—
A 50 3_140.6	140.6	3.2	3.7	3.2	3.7	3.2	4.2	—	—	—	—
A 50 3_154.6	154.6	3.2	3.7	3.2	3.7	3.2	4.2	—	—	—	—
A 50 3_173.4	173.4	3.1	3.6	3.1	3.6	3.0	4.0	—	—	—	—
A 50 3_190.6	190.6	3.0	3.5	3.1	3.6	3.0	4.0	—	—	—	—

For the values of the moment of inertia of 4-stage gearboxes, please contact our Technical Service department.

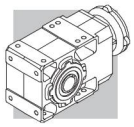

A 55

	i	J (•10-4) [kgm2]										
			IEC									
			63	71	80	90	100	112	132	160	180	
A 55 2_4.9	4.9	61	—	—	—	—	—	—	77	123	120	70
A 55 2_6.4	6.4	41	—	—	—	—	—	—	57	103	100	50
A 55 2_8.5	8.5	26	—	—	—	—	—	—	42	88	85	35
A 55 2_10.4	10.4	19	—	—	—	—	—	—	35	81	78	28
A 55 2_13.1	13.1	12	—	—	14	14	17	17	28	74	72	21
A 55 2_15.7	15.7	8.9	—	—	11	11	14	14	25	71	68	18
A 55 2_19.2	19.2	6.2	—	—	8.6	8.5	11	11	23	68	66	15
A 55 3_23.8	23.8	11	—	—	13	13	16	16	27	73	70	20
A 55 3_29.9	29.9	7.9	—	—	10	10	13	13	24	70	67	17
A 55 3_40.3	40.3	5.3	—	—	7.8	7.6	10	10	22	68	65	14
A 55 3_51.0	51.0	3.6	—	—	6.0	5.9	8.6	8.6	20	66	63	13
A 55 3_64.3	64.3	2.6	3.1	3.0	5.1	5.0	7.7	7.7	19	65	62	12
A 55 3_79.5	79.5	2.0	2.4	2.4	4.5	4.4	7.1	7.1	18	64	62	11
A 55 3_101.4	101.4	1.3	1.8	1.8	3.8	3.7	6.5	6.5	18	64	61	10
A 55 3_123.9	123.9	1.0	1.5	1.5	3.6	3.4	6.2	6.2	17	63	61	10
A 55 3_132.7	132.7	0.71	1.4	1.4	3.5	3.3	6.1	6.1	—	—	—	9.5
A 55 3_146.8	146.8	0.66	1.4	1.4	3.4	3.3	6.0	6.0	—	—	—	9.4
A 55 3_160.4	160.4	0.58	1.3	1.3	3.3	3.2	6.0	6.0	—	—	—	9.4
A 55 3_175.0	175.0	0.50	1.2	1.2	3.3	3.1	5.9	5.9	—	—	—	9.3
A 55 3_194.2	194.2	0.43	1.2	1.2	3.2	3.1	5.8	5.8	—	—	—	9.2

For the values of the moment of inertia of 4-stage gearboxes, please contact our Technical Service department.

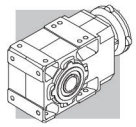

A 55

	i	J (•10-4) [kgm2] SERVO									
		80B 95A		80C 95B 110A		95C 110B 130A		130B 180A		180B	
		SK	SC	SK	SC	SK	SC	SK	SC	SK	SC
A 55 2_4.9	4.9	—	—	—	—	—	—	78	80	77	82
A 55 2_6.4	6.4	—	—	—	—	—	—	58	60	57	62
A 55 2_8.5	8.5	—	—	—	—	—	—	43	45	42	47
A 55 2_10.4	10.4	—	—	—	—	—	—	36	38	35	40
A 55 2_13.1	13.1	—	—	14	15	14	15	29	31	28	33
A 55 2_15.7	15.7	—	—	11	12	11	12	26	28	25	30
A 55 2_19.2	19.2	—	—	8.6	9.1	8.5	9.5	23	26	23	28
A 55 3_23.8	23.8	—	—	13	14	13	14	28	30	27	32
A 55 3_29.9	29.9	—	—	10	11	10	11	25	27	24	29
A 55 3_40.3	40.3	—	—	7.8	8.3	7.6	8.6	22	25	22	27
A 55 3_51.0	51.0	—	—	6.0	6.5	5.9	6.9	21	23	20	25
A 55 3_64.3	64.3	5.4	5.9	5.1	5.6	5.0	6.0	20	22	19	24
A 55 3_79.5	79.5	4.8	5.3	4.5	5.0	4.4	5.4	19	21	18	23
A 55 3_101.4	101.4	4.1	4.6	3.8	4.3	3.7	4.7	18	21	18	23
A 55 3_123.9	123.9	3.8	4.3	3.6	4.1	3.4	4.4	18	20	17	22
A 55 3_132.7	132.7	3.5	4.0	3.5	4.0	3.3	4.3	—	—	—	—
A 55 3_146.8	146.8	3.5	3.9	3.4	3.9	3.3	4.3	—	—	—	—
A 55 3_160.4	160.4	3.4	3.8	3.3	3.8	3.2	4.2	—	—	—	—
A 55 3_175.0	175.0	3.3	3.8	3.3	3.8	3.1	4.1	—	—	—	—
A 55 3_194.2	194.2	3.3	3.7	3.2	3.7	3.1	4.1	—	—	—	—

For the values of the moment of inertia of 4-stage gearboxes, please contact our Technical Service department.

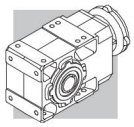

A 60

	i	J (•10-4) [kgm2]										
			IEC									
			63	71	80	90	100	112	132	160	180	
A 60 2_7.9	7.9	36	—	—	—	—	—	—	54	114	112	57
A 60 2_10.3	10.3	23	—	—	25	25	27	27	41	101	99	44
A 60 2_12.7	12.7	16	—	—	19	19	20	20	35	94	92	37
A 60 2_16.7	16.7	9.4	—	—	12	12	14	14	28	88	85	30
A 60 2_20.6	20.6	6.7	—	—	9.6	9.5	11	11	26	85	83	28
A 60 3_25.7	25.7	14	—	—	17	17	18	18	33	92	90	35
A 60 3_27.9	27.9	14	—	—	17	17	18	18	33	92	90	35
A 60 3_31.7	31.7	10	—	—	13	13	15	15	29	89	86	31
A 60 3_34.3	34.3	10	—	—	13	13	14	14	29	89	86	31
A 60 3_41.7	41.7	6.1	—	—	9.0	8.9	10	10	25	84	82	27
A 60 3_45.2	45.2	6.1	—	—	8.9	8.9	10	10	25	84	82	27
A 60 3_51.3	51.3	5.0	—	—	7.4	7.4	8.7	8.7	24	83	81	26
A 60 3_55.6	55.6	4.5	—	—	7.4	7.3	8.6	8.6	23	83	81	26
A 60 3_65.0	65.0	3.2	4.7	4.6	6.1	6.0	7.3	7.3	22	82	79	24
A 60 3_70.4	70.4	3.2	4.7	4.6	6.1	6.0	7.3	7.3	22	81	79	24
A 60 3_79.7	79.7	2.1	3.6	3.5	5.0	4.9	6.2	6.2	21	80	78	23
A 60 3_86.4	86.4	2.1	3.6	3.5	5.0	4.9	6.2	6.2	21	80	78	23
A 60 3_99.5	99.5	2.0	3.5	3.4	4.3	4.3	5.6	5.6	20	80	78	23
A 60 3_107.8	107.8	1.5	3.0	2.9	4.3	4.3	5.6	5.6	20	80	78	22
A 60 3_123.0	123.0	1.1	2.6	2.5	4.0	3.9	5.2	5.2	20	79	77	22
A 60 3_133.3	133.3	1.1	2.6	2.5	3.9	3.9	5.2	5.2	20	79	77	22
A 60 3_144.0	144.0	0.80	2.3	2.2	3.7	3.6	5.0	5.0	—	—	—	22
A 60 3_156.0	156.0	0.80	2.3	2.2	3.7	3.6	5.0	5.0	—	—	—	22
A 60 3_171.5	171.5	0.60	2.1	2.0	3.5	3.4	4.7	4.7	—	—	—	22
A 60 3_185.8	185.8	0.60	2.1	2.0	3.5	3.4	4.7	4.7	—	—	—	22

For the values of the moment of inertia of 4-stage gearboxes, please contact our Technical Service department.

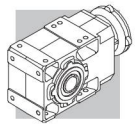

A 60

	i	J (•10-4) [kgm2]									
		SERVO									
		95A		80C 95B 110A		95C 110B 130A		130B 180A		180B	
		SK	SC	SK	SC	SK	SC	SK	SC	SK	SC
A 60 2_7.9	7.9	—	—	—	—	—	—	53	55	54	59
A 60 2_10.3	10.3	—	—	25	26	25	26	40	42	41	46
A 60 2_12.7	12.7	—	—	19	20	19	20	33	35	35	40
A 60 2_16.7	16.7	—	—	12	13	12	13	26	29	28	33
A 60 2_20.6	20.6	—	—	9.6	10	9.5	10	24	26	26	31
A 60 3_25.7	25.7	—	—	17	18	17	18	31	33	33	38
A 60 3_27.9	27.9	—	—	17	18	17	18	31	33	33	38
A 60 3_31.7	31.7	—	—	13	14	13	14	27	29	29	34
A 60 3_34.3	34.3	—	—	13	14	13	14	27	29	29	34
A 60 3_41.7	41.7	—	—	9.0	9.5	8.9	9.9	23	26	25	30
A 60 3_45.2	45.2	—	—	8.9	9.4	8.9	9.9	23	26	25	30
A 60 3_51.3	51.3	—	—	7.4	7.9	7.4	8.4	22	24	24	29
A 60 3_55.6	55.6	—	—	7.4	7.9	7.3	8.3	21	24	23	28
A 60 3_65.0	65.0	6.0	6.5	6.1	6.6	6.0	7.0	20	23	22	27
A 60 3_70.4	70.4	6.0	6.5	6.1	6.6	6.0	7.0	20	23	22	27
A 60 3_79.7	79.7	4.9	5.4	5.0	5.5	4.9	5.9	19	22	21	26
A 60 3_86.4	86.4	4.9	5.4	5.0	5.5	4.9	5.9	19	22	21	26
A 60 3_99.5	99.5	4.8	5.3	4.3	4.8	4.3	5.3	19	21	20	25
A 60 3_107.8	107.8	4.3	4.8	4.3	4.8	4.3	5.3	18	21	20	25
A 60 3_123.0	123.0	3.9	4.4	4.0	4.5	3.9	4.9	18	21	20	25
A 60 3_133.3	133.3	3.9	4.4	3.9	4.4	3.9	4.9	18	21	20	25
A 60 3_144.0	144.0	3.6	4.1	3.7	4.2	3.6	4.6	—	—	—	—
A 60 3_156.0	156.0	3.6	4.1	3.7	4.2	3.6	4.6	—	—	—	—
A 60 3_171.5	171.5	3.4	3.9	3.5	4.0	3.4	4.4	—	—	—	—
A 60 3_185.8	185.8	3.4	3.9	3.5	4.0	3.4	4.4	—	—	—	—

For the values of the moment of inertia of 4-stage gearboxes, please contact our Technical Service department.

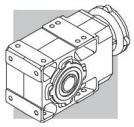

A 70

	i	J (•10-4) [kgm2]											
			IEC										
			80	90	100	112	132	160	180	200	225	250	
A 70 3_9.4	9.4	—	—	—	—	—	—	187	185	194	—	—	150
A 70 3_10.2	10.2	—	—	—	—	—	—	183	180	190	—	—	146
A 70 3_12.1	12.1	—	—	—	—	—	—	150	148	157	—	—	113
A 70 3_13.1	13.1	—	—	—	—	—	—	147	145	154	—	—	111
A 70 3_15.4	15.4	45	—	—	—	—	64	124	121	161	—	—	87
A 70 3_16.7	16.7	44	—	—	—	—	63	122	120	129	—	—	85
A 70 3_19.7	19.7	30	—	—	—	—	49	109	107	—	—	—	72
A 70 3_21.3	21.3	29	—	—	—	—	48	108	106	—	—	—	71
A 70 3_23.5	23.5	—	—	—	—	—	—	116	114	123	—	—	79
A 70 3_27.8	27.8	—	—	—	—	—	—	118	116	125	—	—	81
A 70 3_30.1	30.1	—	—	—	—	—	—	117	115	124	—	—	81
A 70 3_35.4	35.4	26	—	—	—	—	45	104	102	111	—	—	67
A 70 3_38.4	38.4	25	—	—	—	—	44	104	101	111	—	—	67
A 70 3_45.2	45.2	18	—	—	—	—	37	97	94	—	—	—	59
A 70 3_49.0	49.0	18	—	—	—	—	37	96	94	—	—	—	59
A 70 3_53.2	53.2	15	—	—	—	—	34	93	91	—	—	—	56
A 70 3_57.7	57.7	15	—	—	—	—	34	93	91	—	—	—	56
A 70 3_66.9	66.9	9.7	12	12	13	13	29	88	86	—	—	—	51
A 70 3_72.5	72.5	9.6	12	12	13	13	28	88	86	—	—	—	51
A 70 3_79.3	79.3	6.8	9.4	9.3	11	11	26	85	83	—	—	—	48
A 70 3_85.9	85.9	6.7	9.3	9.3	11	11	26	85	83	—	—	—	48
A 70 3_96.2	96.2	5.4	8.2	8.2	9.4	9.4	24	84	82	—	—	—	47
A 70 3_104.2	104.2	5.4	8.2	8.1	9.4	9.4	24	84	81	—	—	—	47
A 70 3_120.6	120.6	3.4	6.2	6.2	7.5	7.5	22	82	79	—	—	—	45
A 70 3_130.7	130.7	3.4	6.2	6.2	7.4	7.4	22	82	79	—	—	—	45
A 70 3_141.9	141.9	2.4	5.3	5.2	6.5	6.5	21	81	78	—	—	—	44
A 70 3_153.7	153.7	2.4	5.2	5.2	6.5	6.5	21	81	78	—	—	—	44

For the values of the moment of inertia of 4-stage gearboxes, please contact our Technical Service department.

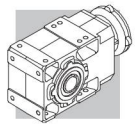

A 80

	i	J (•10-4) [kgm2]											
			IEC										
			80	90	100	112	132	160	180	200	225	250	
A 80 3_9.8	9.8	—	—	—	—	—	—	—	320	333	611	—	286
A 80 3_10.7	10.7	—	—	—	—	—	—	—	309	323	601	—	276
A 80 3_12.3	12.3	—	—	—	—	—	—	239	239	253	531	—	205
A 80 3_13.3	13.3	—	—	—	—	—	—	232	233	246	524	—	199
A 80 3_15.5	15.5	—	—	—	—	—	—	187	185	194	478	—	150
A 80 3_16.7	16.7	—	—	—	—	—	—	183	180	190	474	—	150
A 80 3_19.3	19.3	69	—	—	—	—	88	147	145	154	440	—	111
A 80 3_20.9	20.9	66	—	—	—	—	85	145	142	152	437	—	108
A 80 3_22.6	22.6	—	—	—	—	—	—	—	205	219	496	—	171
A 80 3_24.5	24.5	—	—	—	—	—	—	—	203	217	494	—	169
A 80 3_28.2	28.2	—	—	—	—	—	—	165	166	179	457	—	132
A 80 3_30.6	30.6	—	—	—	—	—	—	164	164	178	456	—	130
A 80 3_35.5	35.5	—	—	—	—	—	—	140	138	147	432	—	104
A 80 3_38.5	38.5	—	—	—	—	—	—	140	137	147	431	—	103
A 80 3_44.5	44.5	39	—	—	—	—	58	118	115	125	410	—	81
A 80 3_48.2	48.2	39	—	—	—	—	58	117	115	124	410	—	90
A 80 3_55.2	55.2	29	—	—	—	—	48	108	105	136	399	—	70
A 80 3_59.8	59.8	29	—	—	—	—	48	107	105	136	399	—	70
A 80 3_66.8	66.8	22	—	—	—	—	41	101	98	128	391	—	63
A 80 3_72.4	72.4	22	—	—	—	—	41	100	98	128	391	—	63
A 80 3_82.3	82.3	15	17	17	18	18	34	94	91	120	384	—	56
A 80 3_89.2	89.2	15	17	17	18	18	34	93	91	120	386	—	56
A 80 3_96.0	96.0	14	16	16	17	17	32	92	90	119	382	—	55
A 80 3_104.0	104.0	13	16	16	17	17	32	92	89	119	382	—	55
A 80 3_116.0	116.0	9.1	12	12	13	13	28	87	85	—	—	—	50
A 80 3_125.6	125.6	9.1	12	12	13	13	28	87	85	—	—	—	50
A 80 3_144.7	144.7	5.4	8.3	8.2	10	10	24	84	82	—	—	—	47
A 80 3_156.8	156.8	5.4	3.0	2.9	4.2	4.2	19	78	76	—	—	—	41

For the values of the moment of inertia of 4-stage gearboxes, please contact our Technical Service department.

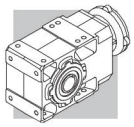

A 90

	i	J (•10-4) [kgm2]											
			IEC										
			80	90	100	112	132	160	180	200	225	250	
A 90 3_9.7	9.7	—	—	—	—	—	—	—	597	611	889	918	898
A 90 3_10.5	10.5	—	—	—	—	—	—	—	575	589	867	896	876
A 90 3_12.6	12.6	—	—	—	—	—	—	—	402	416	693	723	703
A 90 3_13.7	13.7	—	—	—	—	—	—	—	389	403	681	710	690
A 90 3_15.6	15.6	—	—	—	—	—	—	—	306	319	597	627	607
A 90 3_16.9	16.9	—	—	—	—	—	—	—	297	311	589	618	598
A 90 3_19.4	19.4	—	—	—	—	—	—	236	234	243	527	559	530
A 90 3_21.0	21.0	—	—	—	—	—	—	231	228	238	522	553	524
A 90 3_22.3	22.3	—	—	—	—	—	—	—	326	340	618	647	627
A 90 3_24.1	24.1	—	—	—	—	—	—	—	322	336	614	643	623
A 90 3_29.1	29.1	—	—	—	—	—	—	—	243	257	535	564	544
A 90 3_31.5	31.5	—	—	—	—	—	—	—	241	254	532	562	542
A 90 3_35.8	35.8	—	—	—	—	—	—	—	201	215	493	522	502
A 90 3_38.8	38.8	—	—	—	—	—	—	—	200	213	491	521	500
A 90 3_44.6	44.6	—	—	—	—	—	—	169	166	176	460	491	462
A 90 3_48.3	48.3	—	—	—	—	—	—	168	165	175	459	490	461
A 90 3_55.0	55.0	66	—	—	—	—	85	144	142	151	437	468	438
A 90 3_59.6	59.6	66	—	—	—	—	84	144	141	151	436	468	437
A 90 3_68.8	68.8	48	—	—	—	—	67	126	124	154	418	449	416
A 90 3_74.5	74.5	47	—	—	—	—	66	126	123	154	417	449	416
A 90 3_80.4	80.4	43	—	—	—	—	62	121	119	149	412	443	412
A 90 3_87.1	87.1	43	—	—	—	—	62	121	119	148	412	443	412
A 90 3_98.6	98.6	28	30	30	32	32	47	106	104	134	397	428	399
A 90 3_106.8	106.8	28	30	30	31	31	47	106	104	133	397	428	399
A 90 3_116.9	116.9	23	25	25	26	26	41	101	99	128	391	423	394
A 90 3_126.6	126.6	22	25	25	26	26	41	101	98	128	391	422	394
A 90 3_139.4	139.4	15	17	17	19	19	33	93	91	—	—	—	386
A 90 3_151.0	151.0	14	3.0	3.0	4.3	4.3	19	79	76	—	—	—	372

For the values of the moment of inertia of 4-stage gearboxes, please contact our Technical Service department.

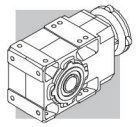

43 EXACT RATIOS

i_N	A 05	A 10	A 20	A 30	A 35	A 41	A 50	A 55	A 60	A 70	A 80	A 90
5.0								4.94505				
5.6	5.46559	5.46559	5.35117	5.41311	5.41311	5.24476						
6.3	6.33484	6.33484	6.53846	6.41026	6.41026			6.41026				
7.1	7.21154	7.21154	7.28745	7.02341	7.02341	7.12251						
8.0	8.51648	8.51648	8.37104	8.46154	8.46154	8.33333	7.73684	8.46154	7.86420			
9.0	9.61538	9.61538	9.37500	9.31174	9.31174	9.19732				9.43946		9.67545
10.0	10.55639	10.55639	10.33540	10.45503	10.63348	10.12987	9.73401	10.35503	10.31579	10.22609	9.83278	10.48174
11.2				11.77885	11.77885	11.74089				12.08027	10.65217	12.64214
12.5	12.30769	12.30769	11.96581		13.06878		13.10700	13.07692	12.70370	13.08696	12.27130	13.69565
14.0	13.92857	13.92857	14.07519	13.56522	15.47619	13.75661				15.40468	13.29391	15.57512
16.0	16.44898	16.44898	16.16807	16.34286	16.95652	16.09524	16.57005	15.68047	16.73663	16.68841	15.45151	16.87304
18.0	18.57143	18.57143	18.10714	17.98496		17.76398					19.33779	19.38462
20.0	21.35714	21.35714	21.22449	20.53782	20.42857		20.91813	19.23077	20.5942	19.66555	20.94928	21.00000
22.4	23.77143	23.77143	23.11111	22.75000	22.48120	22.67669				21.30435	22.61538	22.25354
25.0	25.46939	25.46939	26.46429	26.53061	25.67227		24.04795	23.79021	25.71012	23.52000	24.50000	24.10800
28.0	28.57143	28.57143	29.21905	29.30159	28.43750	28.32143	26.43733		27.85263	27.78462	28.22400	29.07692
31.5	32.19048	32.19048	31.30612	33.42857	33.16327		32.38095	29.93134	31.66154	30.10000	30.57600	31.50000
35.5	35.11688	35.11688	35.42857	36.64762	36.62698	35.90476	35.59829		34.30000	35.43077	35.53846	35.82277
40.0	40.85714	40.85714	39.61905	39.26531	41.78571	45.06667	40.93645	40.30303	41.71282	38.38333	38.50000	38.80800
45.0	45.39683	45.39683	43.22078	43.42857	45.80952	48.28571	45.00386		45.18889	45.23077	44.47692	44.58462
50.0	51.25714	51.25714	48.28571	48.28571	49.08163	53.14286	51.67843	50.95166	51.32709	49.00000	48.18333	48.30000
56.0	58.60317	58.60317	53.65079	52.67532	54.28571	58.80952	56.81314		55.60435	53.23314	55.18154	55.03077
63.0	65.92857	65.92857	63.14286	59.42857	60.35714	64.15584	63.89011	64.32168	64.98947	66.94154	66.80237	59.61667
71.0			70.98413	66.03175	65.84416	71.31429	70.23817		70.40526	72.52000	72.36923	68.75077
80.0	76.40816	76.40816	79.85714	76.51429	74.28571	79.23810	81.45055	79.52098	79.71923	79.32781	82.32000	80.37160
90.0	91.61905	91.61905	92.32653	86.66667	82.53968	92.76828	89.54339		86.36250	85.93846	89.18000	87.06923
100.0				97.50000	95.64286		99.53407	101.37762	99.50769	96.21818	104.03077	98.60308
112.2			109.16518	109.07029	105.54155	115.86039	109.42367	123.88531	107.80000	104.23636	115.95524	116.90414
125.0			120.52857	120.46208	116.90972		129.67046	132.73427	123.02769	120.61538	125.61818	126.64615
140.0			146.14286	137.42857	136.33787	146.88312	140.61938	146.80796	144.04260	141.86014	144.73846	139.39301
160.0			163.42857	161.42404	150.57760		154.59118	160.43706	171.46573	169.75499	156.80000	166.12694
180.0			178.28571	178.53968	171.78571	184.36364	173.36264	175.02225	185.75455	183.90123	171.29752	179.97085
200.0			199.17857	198.50794	201.78005	197.53247	190.58777	194.19860	208.73017		214.73193	209.01044
225.0			221.30952	216.55411	223.17460	217.40260	231.98700	208.05260	226.12435	220.25418	232.62626	226.42797
250.0			260.46429	244.31746	248.13492	240.58442	260.88462		264.29053	238.60870		
280.0			292.80952	271.46384	270.69264	291.74026	286.80584	262.64685	286.31474	292.01619	277.28428	281.43590
315.0			329.41071	314.55873	305.39683	324.15584	332.58974		324.19154	316.35088	300.39130	304.88889
355.0				356.29630	339.32981	376.83117	365.63552	324.71066	351.20750	369.38462	353.96864	355.79521
400.0			380.84694	400.83333	393.19841		406.43077		404.66462	400.16667	383.46603	385.44482
450.0							446.81331	413.95862	438.38667	475.76068	442.07937	449.15802
500.0							481.63314	505.86503	500.31262	515.40741	478.91932	486.58785
560.0							574.19580	541.99825	585.77325	595.03590	560.45035	555.29467
630.0							631.24731	655.11801	634.58769	644.62222	607.15455	601.56923
710.0							707.89744	714.67419	697.29399	705.13609	703.46182	707.91953
800.0							778.23340	792.97762	755.40182	855.27273	829.52598	766.91282
900.0										926.54545	898.65315	865.09065
1000.0										1072.13675	1001.43166	1025.1594
1125.0										1161.48148	1084.88430	1110.58935
1250.0										1242.33846	1236.85594	1222.17967
1400.0										1345.86667	1339.92727	1324.02797
1600.0										1583.07692	1557.66545	1506.76450
1800.0										1715.00000		1632.32821

2x 3x 4x

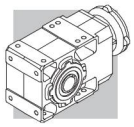

44 DIMENSIONS

A 05...M

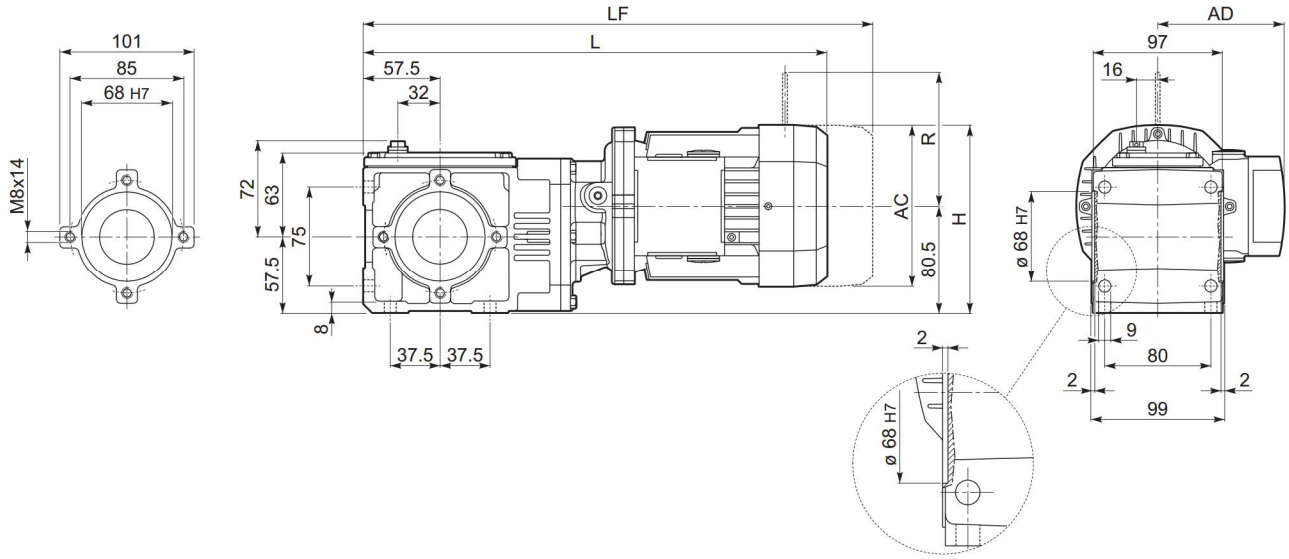

								M...FD M...FA		M...FD		M...FA	
			AC	H	L	AD	Kg	LF	Kg	R	AD	R	AD
A 05 2	**S05**	**M05**	121	141	360.5	95	7.5	426.5	9	96	122	116	95
A 05 2	**S1**	**M1**	138	149.5	389.5	108	11.5	450.5	14	103	135	124	108
A 05 2	**S2**	**M2S**	156	158.5	418.5	119	15.5	488.5	19	129	146	134	119

A 05...P(IEC)

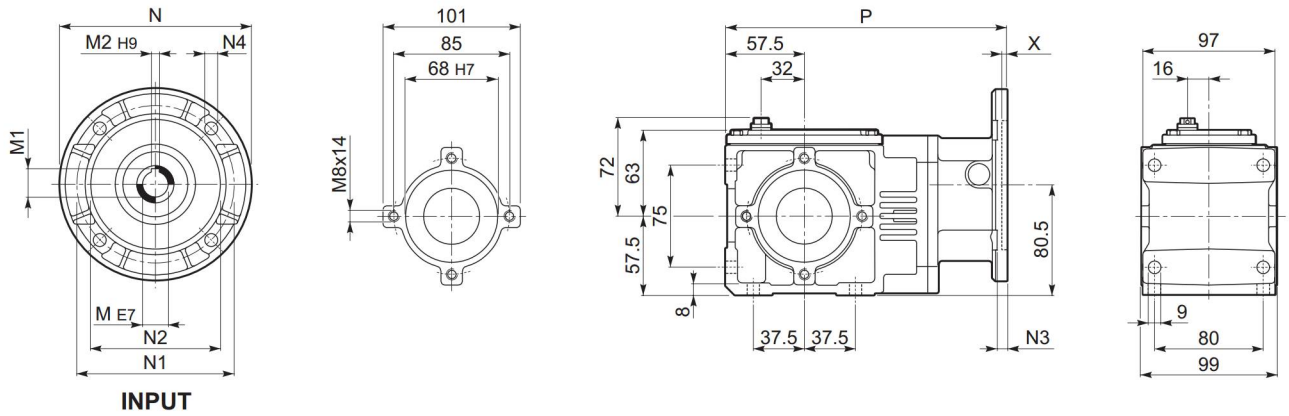

		M	M1	M2	N	N1	N2	N3	N4	X	P	Kg
A 05 2	**P63**	11	12.8	4	140	115	95	7	9.5	3.5	206	5
A 05 2	**P71**	14	16.3	5	160	130	110	7	9.5	4	213	5
A 05 2	**P80**	19	20.8#	6	200	165	130	7	11.5	4	223	5.5

Lowered key of Bonfiglioli supply

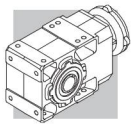

A 05...SK / SC

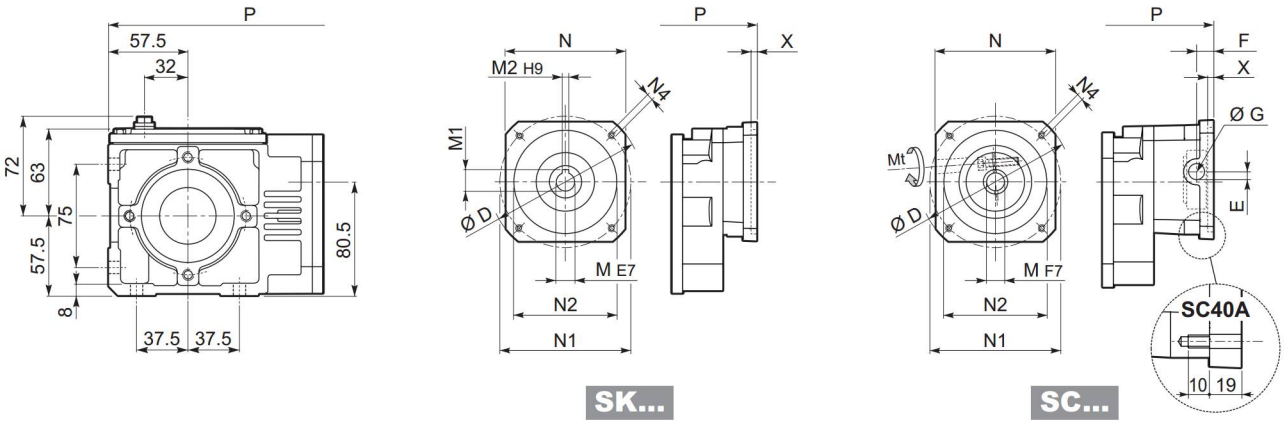

		D	M	M1	M2	N	N1	N2	N4	X	P	Kg
A 05 2	**SK40A**	74	9	10.4	3	55	63	40	M5x10	3	207.5	5
A 05 2	**SK60A**	102	11	12.8	4	82	75	60	M5x10	3.5	206	5
A 05 2	**SK60B**	102	14	16.3	5	82	75	60	M5x10	4	213	5
A 05 2	**SK80A**	115	14	16.3	5	90	100	80	M6x12	4	213	5

			Mt	D	E	F	G	M	N	N1	N2	N4	X	P	Kg
A 05 2	**SC40A**	M5	15 Nm	74	10.5	9.5	12.5	9	55	63	40	M5x10	3	226.5	6
A 05 2	**SC60A**	M6	15 Nm	102	7	12.5	12.5	11	82	75	60	M5x10	4	233	6
A 05 2	**SC60B**	M6	15 Nm	102	7	12.5	12.5	14	82	75	60	M5x10	4	233	6
A 05 2	**SC80A**	M6	15 Nm	115	6	12.5	12.5	14	90	100	80	M6x12	4	233	6

A 05...F...

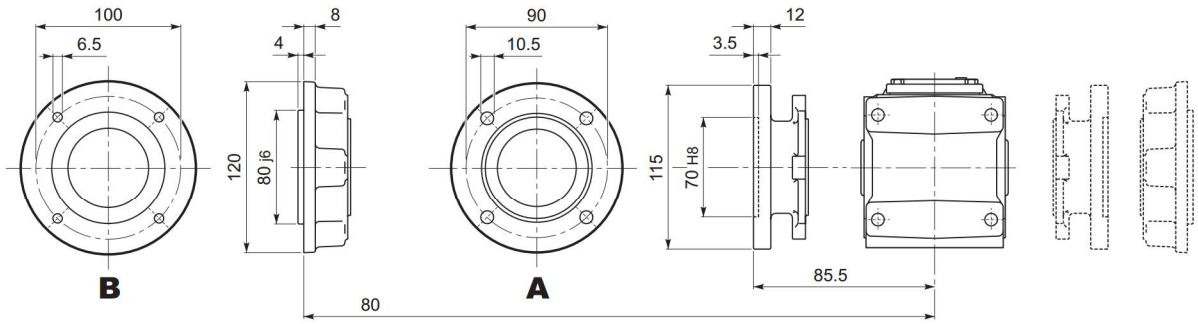

Bonfiglioli Riduttori

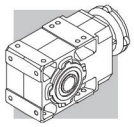

A 05

A 05...UH

H25

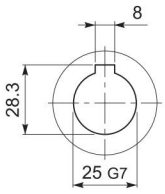

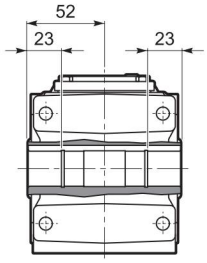

A 05...US

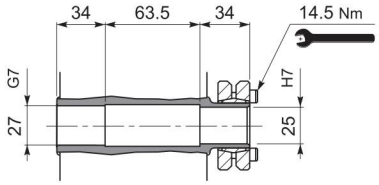

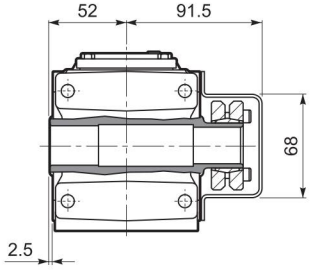

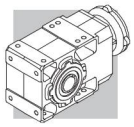

A 10...M

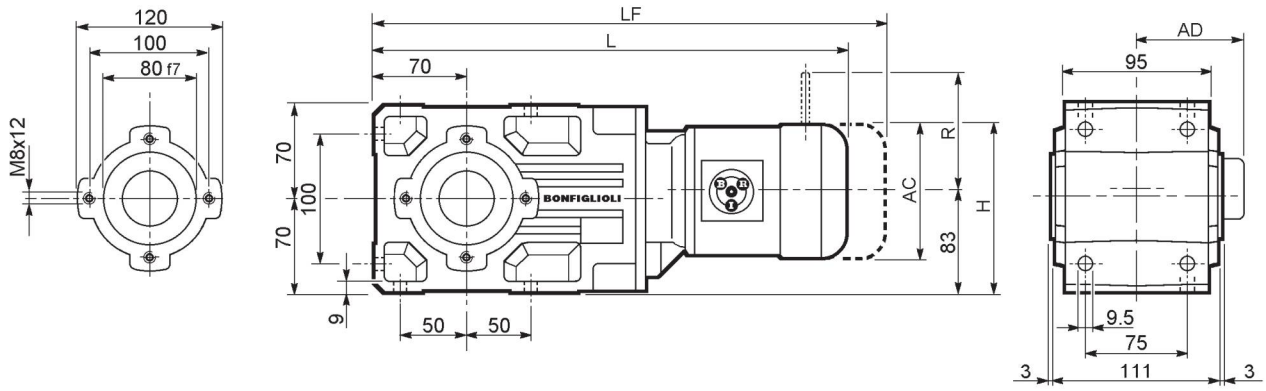

								M...FD M...FA		M...FD		M...FA	
			AC	H	L	AD	Kg	LF	Kg	R	AD	R	AD
A 10 2	**S05**	**M05**	121	143.5	408.5	95	12	474.5	14	96	122	116	95
A 10 2	**S1**	**M1**	138	152	437.5	108	14	498.5	17	103	135	124	108
A 10 2	**S2**	**M2S**	156	161	466.5	119	18	536.5	22	129	146	134	119
A 10 2	**S3**	**M3S**	195	180.5	509.5	142	23	605.5	30	160	158	160	142
A 10 2	**S3**	**M3L**	195	180.5	541.5	142	30	632.5	37	160	158	160	142

A 10...P(IEC)

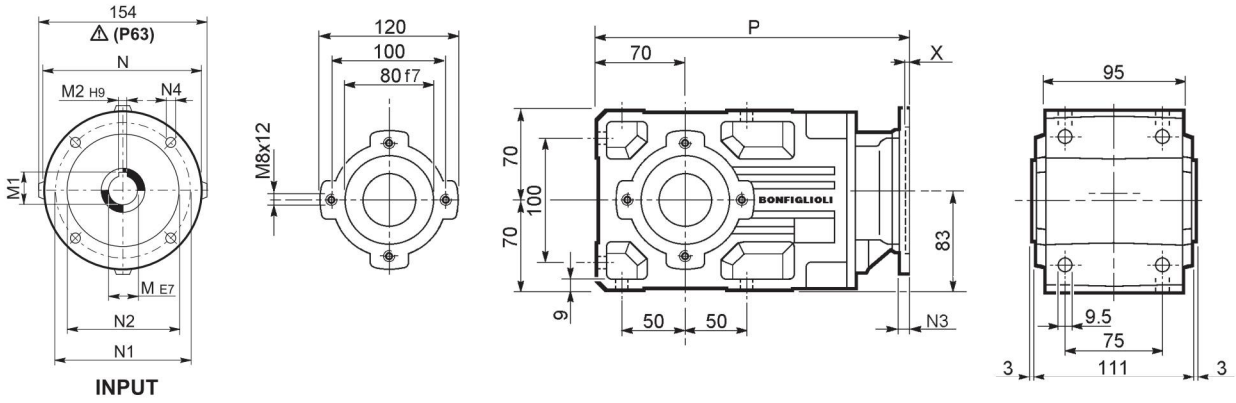

		M	M1	M2	N	N1	N2	N3	N4	X	P	Kg
A 10 2	**P63**	11	12.8	4	140	115	95	—	M8x10	4	282.5	8
A 10 2	**P71**	14	16.3	5	160	130	110	—	M8x10	4.5	282.5	9
A 10 2	**P80**	19	21.8	6	200	165	130	—	M10x12	4	302	9
A 10 2	**P90**	24	27.3	8	200	165	130	—	M10x12	4	302	9
A 10 2	**P100**	28	31.3	8	250	215	180	—	M12x16	4.5	312	13
A 10 2	**P112**	28	31.3	8	250	215	180	—	M12x16	4.5	312	13

A 10...HS

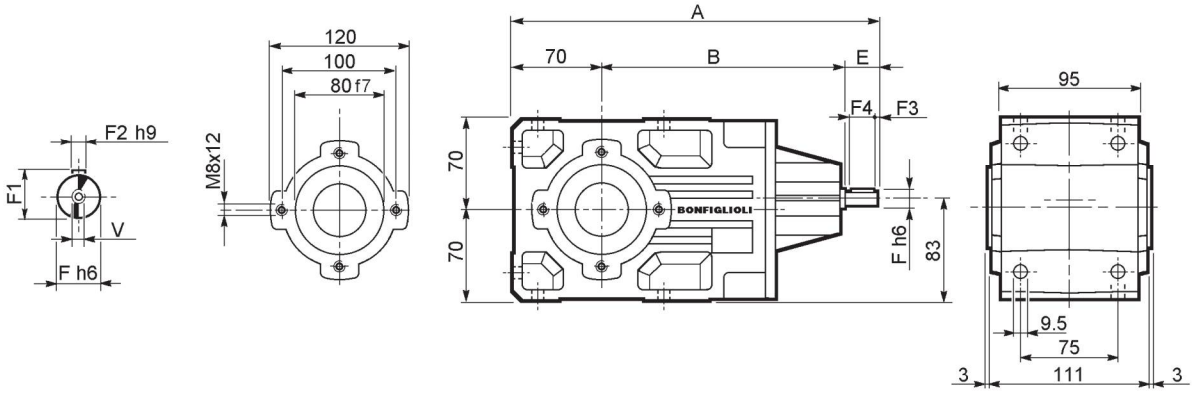

		A	B	E	F	F1	F2	F3	F4	V	Kg
A 10 2	**HS**	289.5	179.5	40	16	18	5	2.5	35	M6x16	7.8

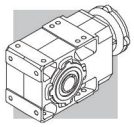

A 10...SK / SC

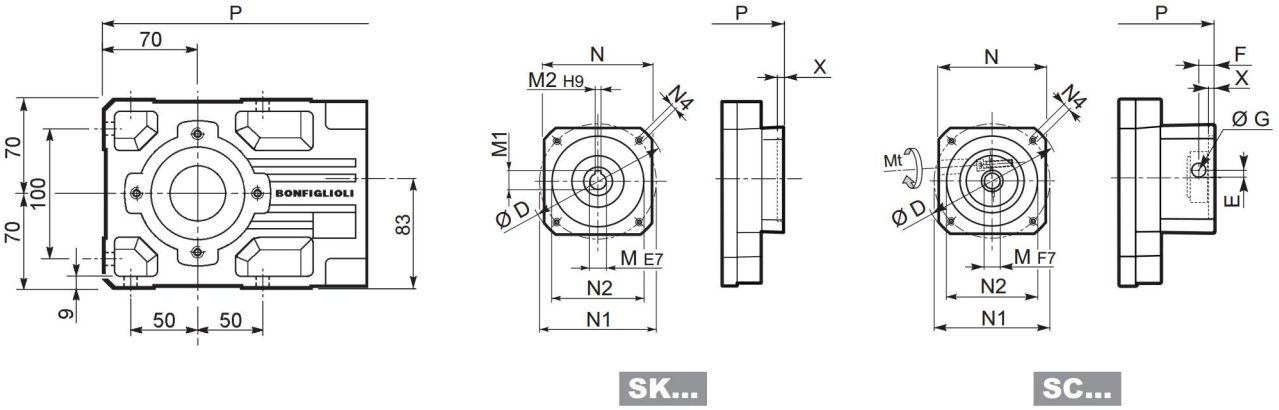

		D	M	M1	M2	N	N1	N2	N4	X	P	Kg
A 10 2	**SK60A**	102	11	12.8	4	82	75	60	M5x10	3.5	254	8
A 10 2	**SK60B**	102	14	16.3	5	82	75	60	M5x10	4	261	8
A 10 2	**SK80A**	115	14	16.3	5	90	100	80	M6x12	4	261	8
A 10 2	**SK80C**	120	19	21.8	6	96	100	80	M6x12	4	302	9
A 10 2	**SK95A**	130	14	16.3	5	102	115	95	M8x12	4	302	9
A 10 2	**SK95B**	130	19	21.8	6	102	115	95	M8x12	4	302	9
A 10 2	**SK95C**	130	24	27.3	8	102	115	95	M8x12	4	302	9
A 10 2	**SK110A**	150	19	21.8	6	120	130	110	M8x12	5	302	9
A 10 2	**SK110B**	150	24	27.3	8	120	130	110	M8x12	5	302	9

		Mt		D	E	F	G	M	N	N1	N2	N4	X	P	Kg
A 10 2	**SC60A**	M6	15 Nm	102	7	12.5	12.5	11	82	75	60	M5x10	4	281	9
A 10 2	**SC60B**	M6	15 Nm	102	7	12.5	12.5	14	82	75	60	M5x10	4	281	9
A 10 2	**SC80A**	M6	15 Nm	115	6	12.5	12.5	14	90	100	80	M6x12	4	281	9
A 10 2	**SC80C**	M6	15 Nm	120	15.5	14.5	17.75	19	96	100	80	M6x12	4	325.5	10
A 10 2	**SC95A**	M6	15 Nm	130	16.5	15	17.75	14	102	115	95	M8x16	4	325.5	10
A 10 2	**SC95B**	M6	15 Nm	130	16.5	15	17.75	19	102	115	95	M8x16	4	325.5	10
A 10 2	**SC95C**	M6	15 Nm	130	16.5	15	17.75	24	102	115	95	M8x16	4	325.5	10
A 10 2	**SC110A**	M6	15 Nm	150	16.5	16	17.75	19	120	130	110	M8x16	5	325.5	12
A 10 2	**SC110B**	M6	15 Nm	150	16.5	16	17.75	24	120	130	110	M8x16	5	325.5	12

A 10...F...

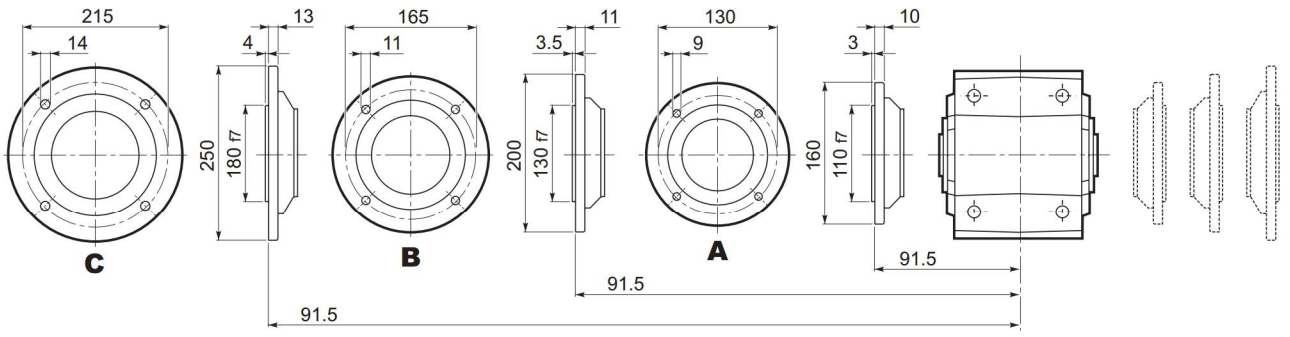

Bonfiglioli Riduttori

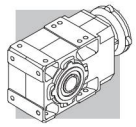

A 10

A 10...UR

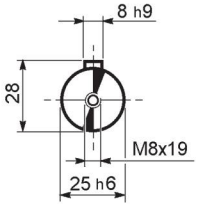

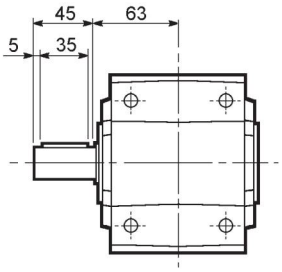

A 10...UD

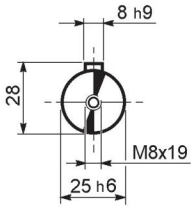

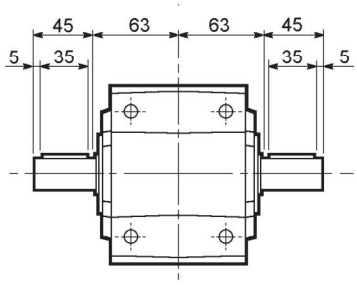

A 10...UH

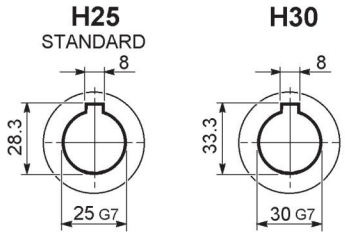

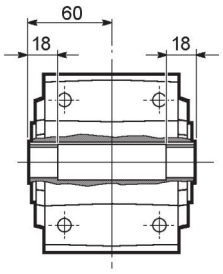

A 10...US

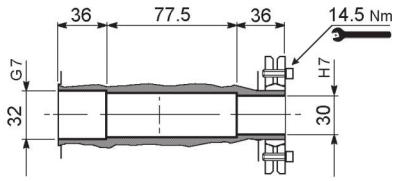

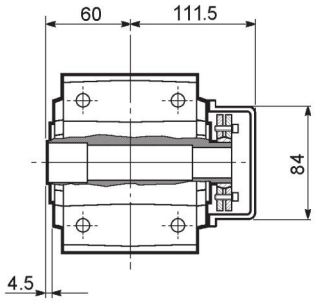

A 10...QF

	Ø
QF25	25
QF30	30

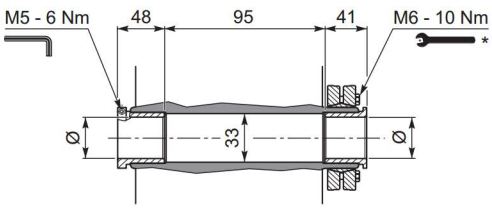

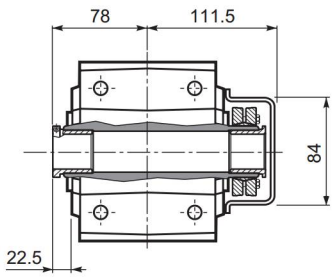

* Follow the MOUNTING INSTRUCTIONS supplied with the gearbox.supplied with the gearbox.

A 20...M

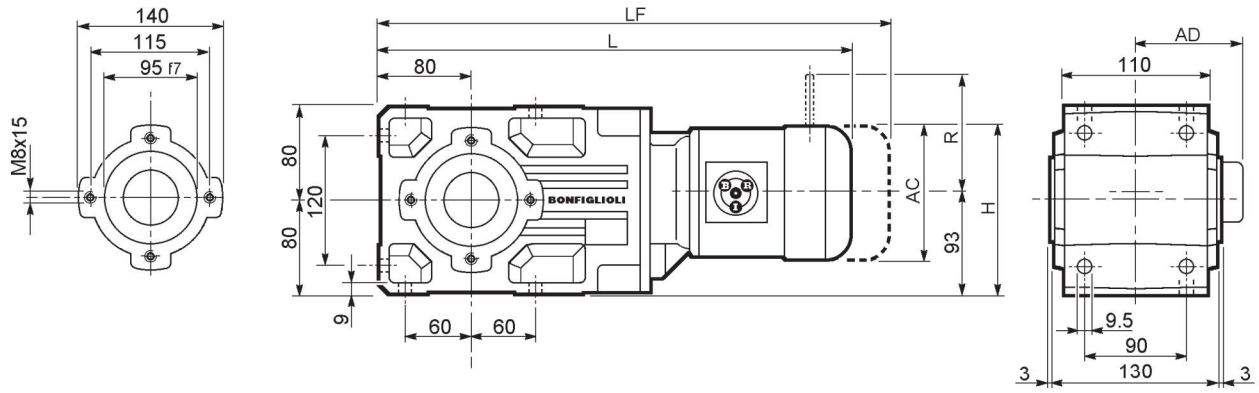

								M...FD M...FA		M...FD		M...FA	
			AC	H	L	AD	Kg	LF	Kg	R	AD	R	AD
A 20 2	**S05**	**M05**	121	143.5	432	95	16	498	18	96	122	116	95
A 20 2	**S1**	**M1**	138	152	461	108	18	522	21	103	135	124	108
A 20 2	**S2**	**M2S**	156	161	490	119	22	560	26	129	146	134	119
A 20 2	**S3**	**M3S**	195	180.5	533	142	27	629	34	160	158	160	142
A 20 2	**S3**	**M3L**	195	180.5	565	142	34	656	41	160	158	160	142
A 20 3	**S05**	**M05**	121	143.5	457.5	95	16	553.5	18	96	122	116	95
A 20 3	**S1**	**M1**	138	152	486.5	108	19	577.5	21	103	135	124	108
A 20 3	**S2**	**M2S**	156	161	545.5	119	23	615.5	27	129	146	134	119
A 20 3	**S3**	**M3S**	195	180.5	588.5	142	28	684.5	35	160	158	160	142
A 20 3	**S3**	**M3L**	195	180.5	620.5	142	35	711.5	42	160	158	160	142

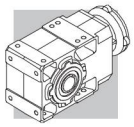

A 20...P(IEC)

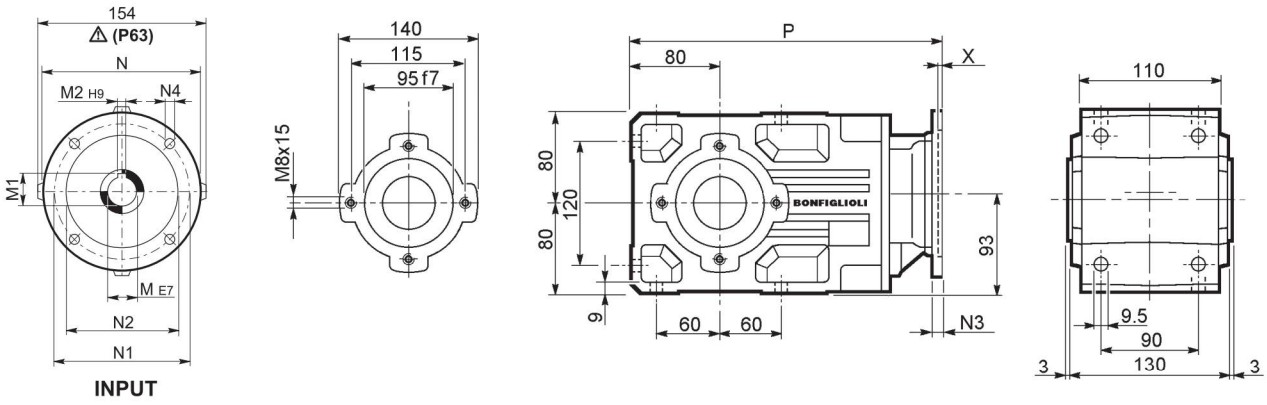

		M	M1	M2	N	N1	N2	N3	N4	X	P	Kg
A 20 2	**P63**	11	12.8	4	140	115	95	—	M8x19	4	306	12
A 20 2	**P71**	14	16.3	5	160	130	110	—	M8x16	4.5	306	12
A 20 2	**P80**	19	21.8	6	200	165	130	—	M10x12	4	325.5	13
A 20 2	**P90**	24	27.3	8	200	165	130	—	M10x12	4	325.5	13
A 20 2	**P100**	28	31.3	8	250	215	180	—	M12x16	4.5	335.5	17
A 20 2	**P112**	28	31.3	8	250	215	180	—	M12x16	4.5	335.5	17
A 20 3	**P63**	11	12.8	4	140	115	95	—	M8x19	4	361.5	13
A 20 3	**P71**	14	16.3	5	160	130	110	—	M8x16	4.5	361.5	13
A 20 3	**P80**	19	21.8	6	200	165	130	—	M10x12	4	381	14
A 20 3	**P90**	24	27.3	8	200	165	130	—	M10x12	4	381	14
A 20 3	**P100**	28	31.3	8	250	215	180	—	M12x16	4.5	391	18
A 20 3	**P112**	28	31.3	8	250	215	180	—	M12x16	4.5	391	18

A 20...HS

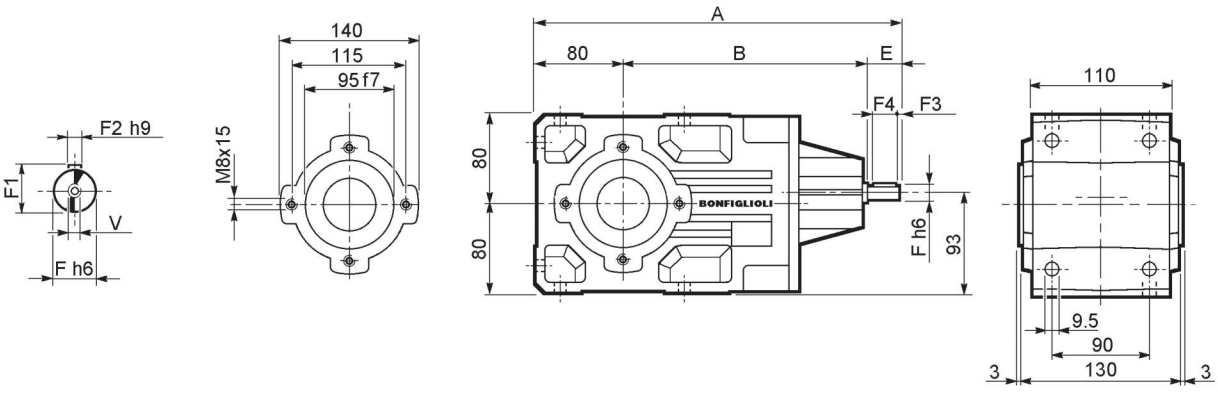

		A	B	E	F	F1	F2	F3	F4	V	Kg
A 20 2	**HS**	356	236	40	19	21.5	6	2.5	35	M6x16	11.9
A 20 3		368.5	248.5	40	16	18	5	2.5	35	M6x16	12.2

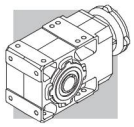

A 20...SK / SC

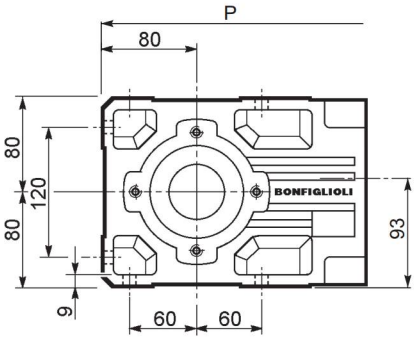

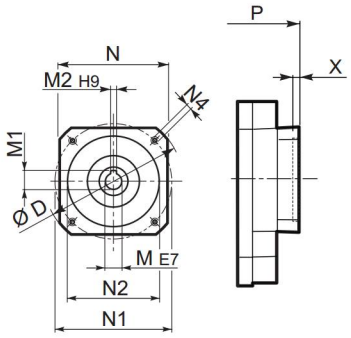

SK...

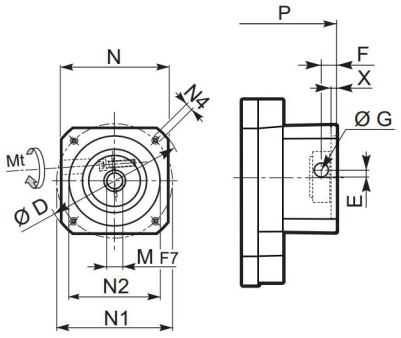

SC...

		D	M	M1	M2	N	N1	N2	N4	X	P 2x	P 3x	Kg
A 20 2/3	**SK60A**	102	11	12.8	4	82	75	60	M5x10	3.5	277.5	333	11/12
A 20 2/3	**SK60B**	102	14	16.3	5	82	75	60	M5x10	4	284.5	340	12/13
A 20 2/3	**SK80A**	115	14	16.3	5	90	100	80	M6x12	4	284.5	340	12/13
A 20 2/3	**SK80C**	120	19	21.8	6	96	100	80	M6x12	4	325.5	381	13/14
A 20 2/3	**SK95A**	130	14	16.3	5	102	115	95	M8x12	4	325.5	381	13/14
A 20 2/3	**SK95B**	130	19	21.8	6	102	115	95	M8x12	4	325.5	381	13/14
A 20 2/3	**SK95C**	130	24	27.3	8	102	115	95	M8x12	4	325.5	381	13/14
A 20 2/3	**SK110A**	150	19	21.8	6	120	130	110	M8x12	5	325.5	381	13/14
A 20 2/3	**SK110B**	150	24	27.3	8	120	130	110	M8x12	5	325.5	381	13/14

		Mt		D	E	F	G	M	N	N1	N2	N4	X	P 2x	P 3x	Kg
A 20 2/3	**SC60A**	M6	15 Nm	102	7	12.5	12.5	11	82	75	60	M5x10	4	304.5	360	12/13
A 20 2/3	**SC60B**	M6	15 Nm	102	7	12.5	12.5	14	82	75	60	M5x10	4	304.5	360	13/14
A 20 2/3	**SC80A**	M6	15 Nm	115	6	12.5	12.5	14	90	100	80	M6x12	4	304.5	360	13/14
A 20 2/3	**SC80C**	M6	15 Nm	120	15.5	14.5	17.75	19	96	100	80	M6x12	4	349	404.5	14/15
A 20 2/3	**SC95A**	M6	15 Nm	130	16.5	15	17.75	14	102	115	95	M8x16	4	349	404.5	14/15
A 20 2/3	**SC95B**	M6	15 Nm	130	16.5	15	17.75	19	102	115	95	M8x16	4	349	404.5	14/15
A 20 2/3	**SC95C**	M6	15 Nm	130	16.5	15	17.75	24	102	115	95	M8x16	4	349	404.5	14/15
A 20 2/3	**SC110A**	M6	15 Nm	150	16.5	16	17.75	19	120	130	110	M8x16	5	349	404.5	15/16
A 20 2/3	**SC110B**	M6	15 Nm	150	16.5	16	17.75	24	120	130	110	M8x16	5	349	404.5	15/16

A 20...F...

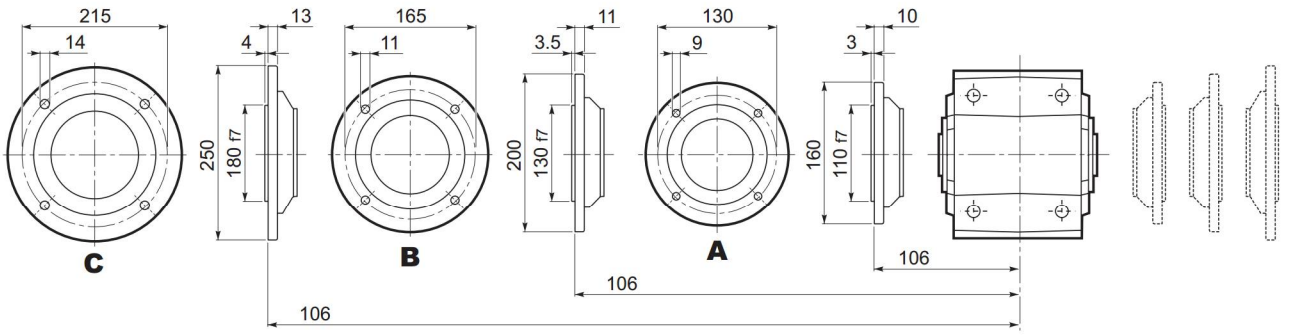

Bonfiglioli Riduttori

A 20

A 20...UR

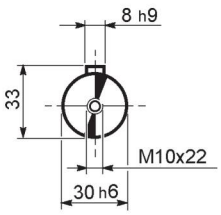

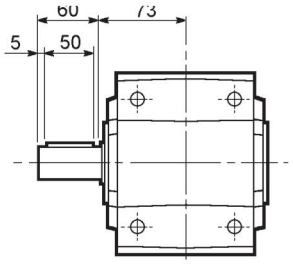

A 20...UD

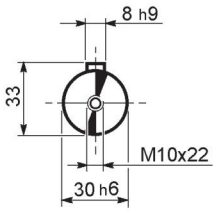

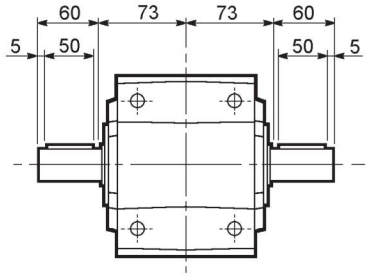

A 20...UH

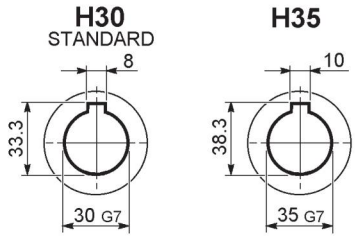

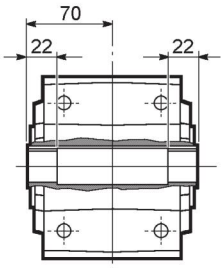

A 20...US

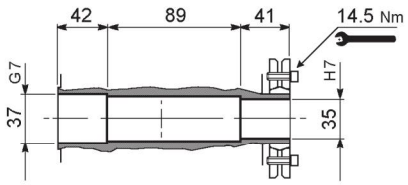

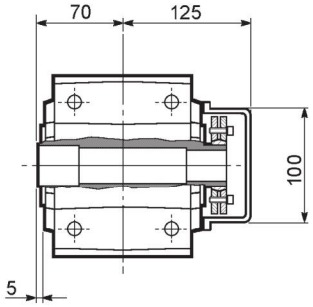

A 20...QF

	Ø
QF25	25
QF30	30

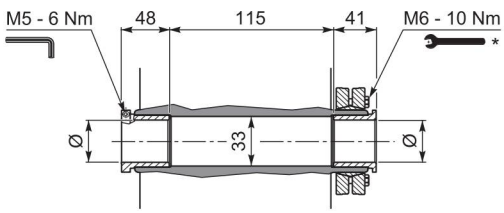

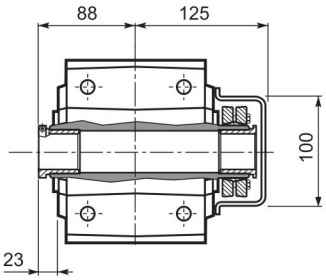

A 20...UV

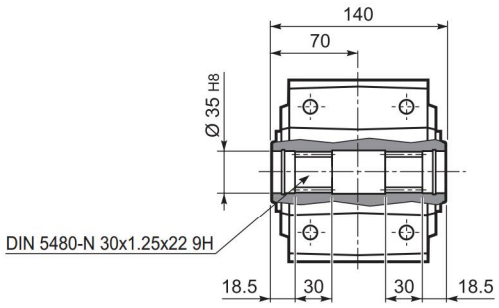

* Follow the MOUNTING INSTRUCTIONS supplied with the gearbox.

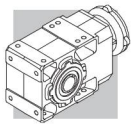

A 30...M

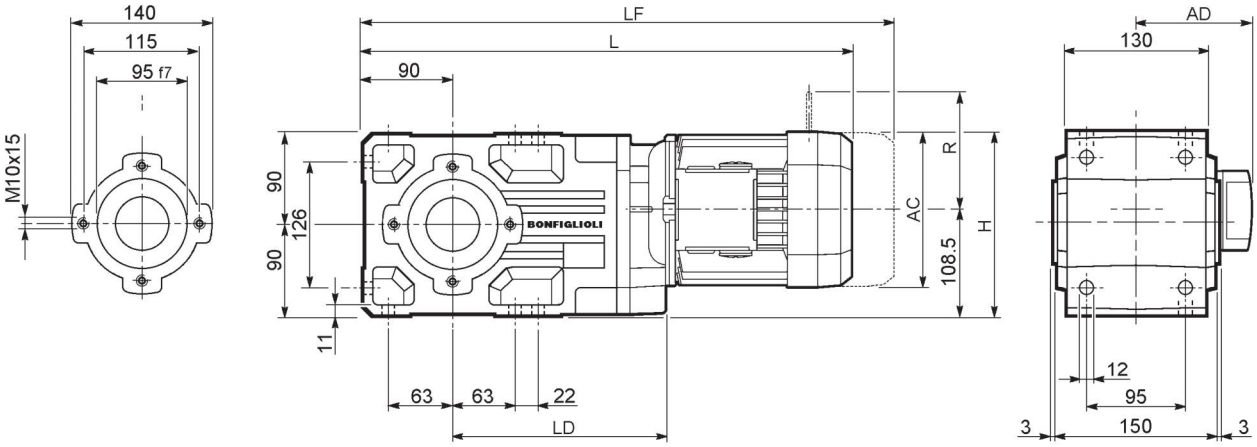

									M...FD M...FA		M...FD		M...FA	
			AC	H	L	LD	AD	Kg	LF	Kg	R	AD	R	AD
A 30 2	**S1**	**M1**	138	177.5	488	201	108	22	549	24	103	135	124	108
A 30 2	**S2**	**M2S**	156	186.5	517	213	119	25	587	29	129	146	134	119
A 30 2	**S3**	**M3S**	195	206	560	223	142	30	656	38	160	158	160	142
A 30 2	**S3**	**M3L**	195	206	592	223	142	38	683	45	160	158	160	142
A 30 3	**S05**	**M05**	121	169	516.5	—	95	21	582.5	22	96	122	116	95
A 30 3	**S1**	**M1**	138	177.5	545.5	—	108	23	606.5	26	103	135	124	108
A 30 3	**S2**	**M2S**	156	186.5	574.5	—	119	25	644.5	29	129	146	134	119
A 30 3	**S3**	**M3S**	195	206	617.5	—	142	30	713.5	38	160	158	160	142
A 30 3	**S3**	**M3L**	195	206	649.5	—	142	38	740.5	45	160	158	160	142

A 30...P(IEC)

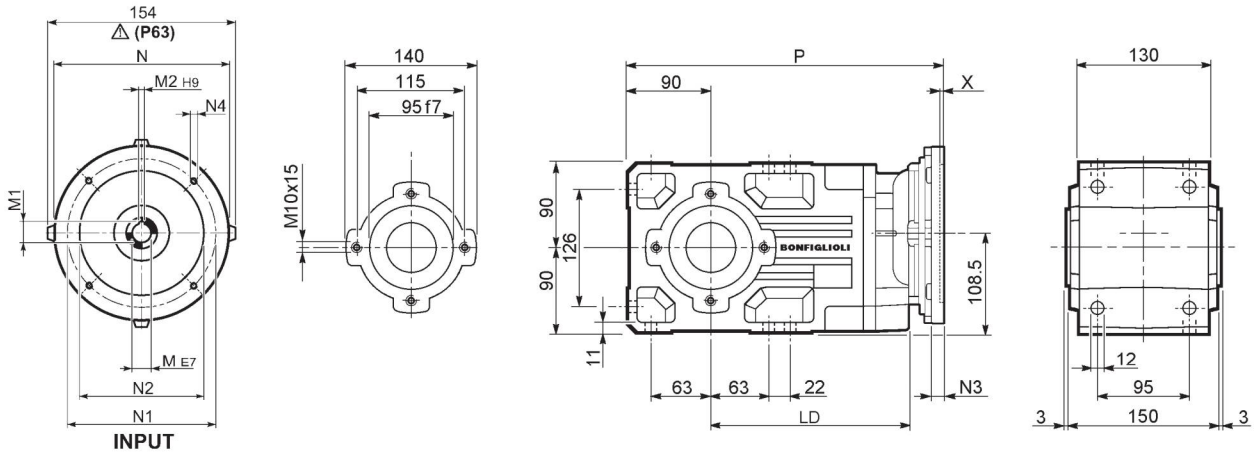

		LD	M	M1	M2	N	N1	N2	N3	N4	X	P	Kg
A 30 2	**P63**	213	11	12.8	4	140	115	95	—	M8x19	4	333	16
A 30 2	**P71**	213	14	16.3	5	160	130	110	—	M8x16	4.5	333	16
A 30 2	**P80**	223	19	21.8	6	200	165	130	—	M10x12	4	352.5	17
A 30 2	**P90**	223	24	27.3	8	200	165	130	—	M10x12	4	352.5	17
A 30 2	**P100**	223	28	31.3	8	250	215	180	—	M12x16	4.5	362.5	20
A 30 2	**P112**	223	28	31.3	8	250	215	180	—	M12x16	4.5	362.5	20
A 30 3	**P63**	—	11	12.8	4	140	115	95	—	M8x19	4	390.5	17
A 30 3	**P71**	—	14	16.3	5	160	130	110	—	M8x16	4.5	390.5	17
A 30 3	**P80**	—	19	21.8	6	200	165	130	—	M10x12	4	410	18
A 30 3	**P90**	—	24	27.3	8	200	165	130	—	M10x12	4	410	18
A 30 3	**P100**	—	28	31.3	8	250	215	180	—	M12x16	4.5	420	22
A 30 3	**P112**	—	28	31.3	8	250	215	180	—	M12x16	4.5	420	22

A 30...HS

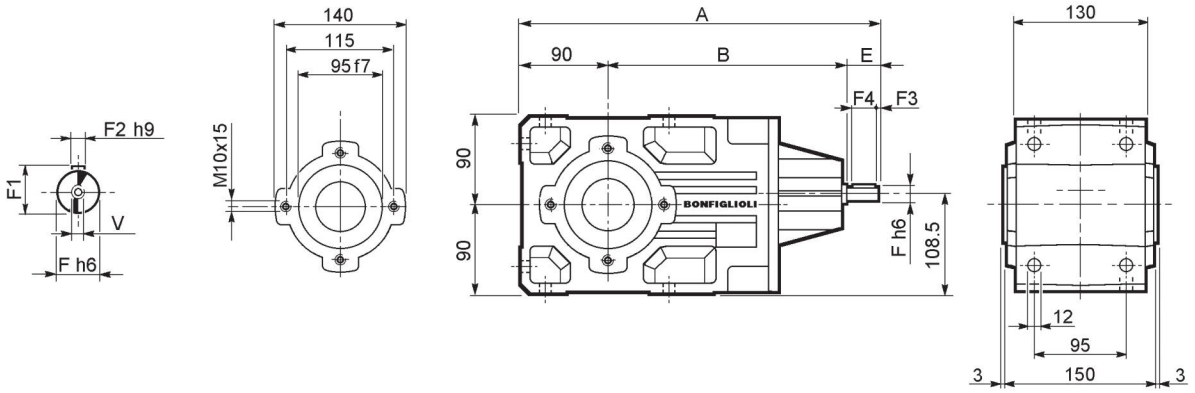

		A	B	E	F	F1	F2	F3	F4	V	Kg
A 30 2	**HS**	383	253	40	19	21.5	6	2.5	35	M6x16	16.7
A 30 3		397.5	267.5	40	16	18	5	2.5	35	M6x16	16.5

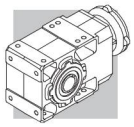

A 30...SK / SC

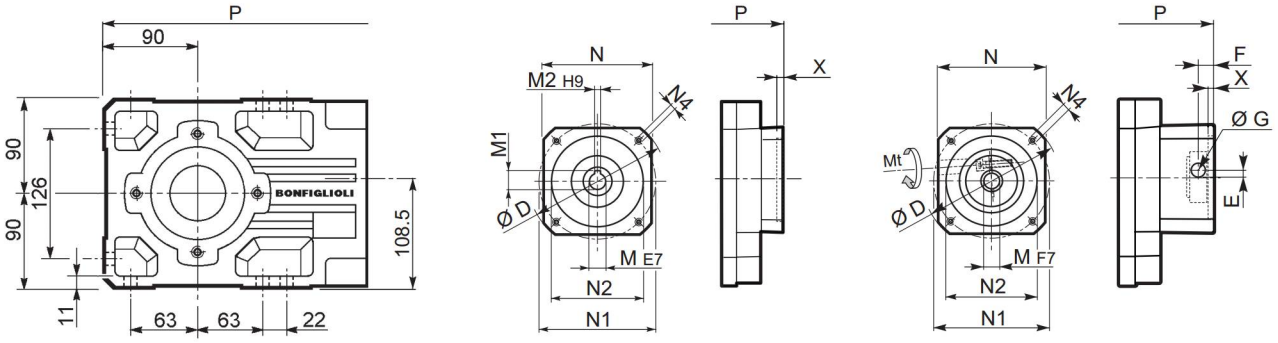

SK...

SC...

		D	M	M1	M2	N	N1	N2	N4	X	P 2x	P 3x	Kg
A 30 2/3	**SK60A**	102	11	12.8	4	82	75	60	M5x10	3.5	304.5	362	15/16
A 30 2/3	**SK60B**	102	14	16.3	5	82	75	60	M5x10	4	311.5	369	16/17
A 30 2/3	**SK80A**	115	14	16.3	5	90	100	80	M6x12	4	311.5	369	16/17
A 30 2/3	**SK80C**	120	19	21.8	6	96	100	80	M6x12	4	352.5	410	17/18
A 30 2/3	**SK95A**	130	14	16.3	5	102	115	95	M8x12	4	352.5	410	17/18
A 30 2/3	**SK95B**	130	19	21.8	6	102	115	95	M8x12	4	352.5	410	17/18
A 30 2/3	**SK95C**	130	24	27.3	8	102	115	95	M8x12	4	352.5	410	17/18
A 30 2/3	**SK110A**	150	19	21.8	6	120	130	110	M8x12	5	352.5	410	17/18
A 30 2/3	**SK110B**	150	24	27.3	8	120	130	110	M8x12	5	352.5	410	17/18
A 30 2	**SK130A**	188	24	27.3	8	142	165	130	M10x20	5	352.5	—	18

		Mt		D	E	F	G	M	N	N1	N2	N4	X	P 2x	P 3x	Kg
A 30 2/3	**SC60A**	M6	15 Nm	102	7	12.5	12.5	11	82	75	60	M5x10	4	331.5	389	16/17
A 30 2/3	**SC60B**	M6	15 Nm	102	7	12.5	12.5	14	82	75	60	M5x10	4	331.5	389	17/18
A 30 2/3	**SC80A**	M6	15 Nm	115	6	12.5	12.5	14	90	100	80	M6x12	4	331.5	389	17/18
A 30 2/3	**SC80C**	M6	15 Nm	120	15.5	14.5	17.75	19	96	100	80	M6x12	4	376	433.5	18/19
A 30 2/3	**SC95A**	M6	15 Nm	130	16.5	15	17.75	14	102	115	95	M8x16	4	376	433.5	18/19
A 30 2/3	**SC95B**	M6	15 Nm	130	16.5	15	17.75	19	102	115	95	M8x16	4	376	433.5	18/19
A 30 2/3	**SC95C**	M6	15 Nm	130	16.5	15	17.75	24	102	115	95	M8x16	4	376	433.5	18/19
A 30 2/3	**SC 110A**	M6	15 Nm	150	16.5	16	17.75	19	120	130	110	M8x16	5	376	433.5	19/20
A 30 2/3	**SC 110B**	M6	15 Nm	150	16.5	16	17.75	24	120	130	110	M8x16	5	376	433.5	19/20
A 30 2	**SC 130A**	M6	15 Nm	188	19	16	17.75	24	142	165	130	M10x20	5	376	—	20

A 30...F...

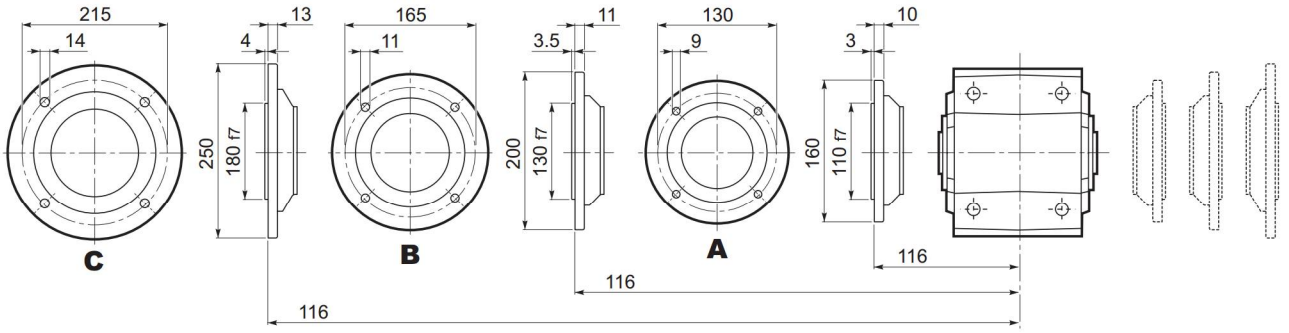

Bonfiglioli Riduttori

A 30

A 30...UR

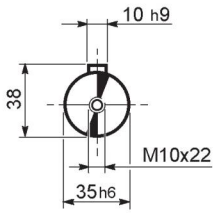

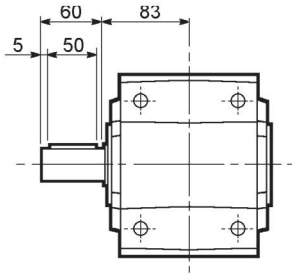

A 30...UD

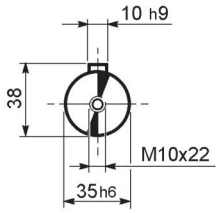

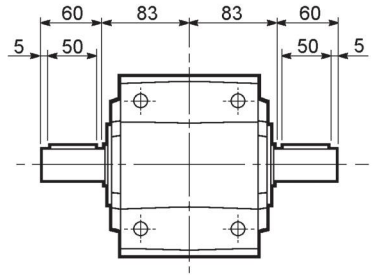

A 30...UH

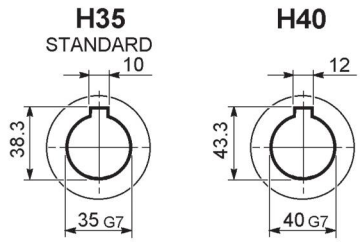

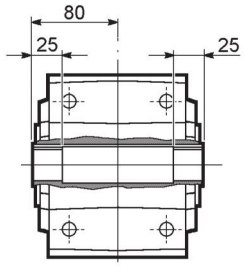

A 30...US

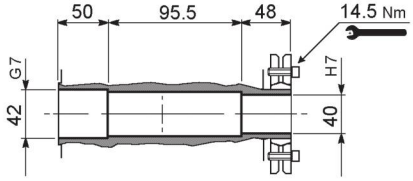

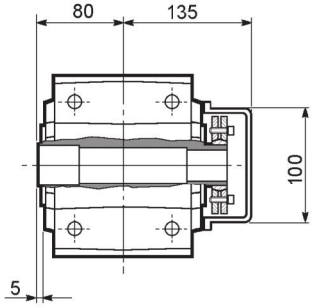

A 30...QF

	Ø
QF35	35
QF40	40

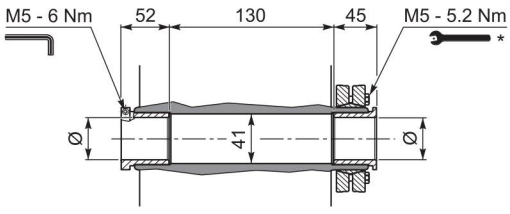

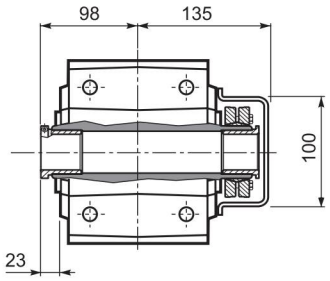

A 30...UV

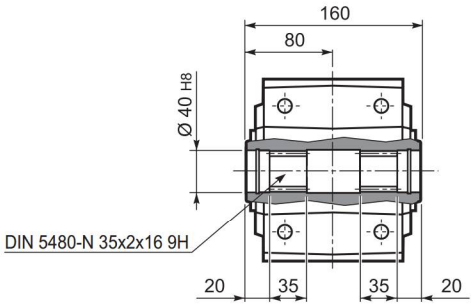

* Follow the MOUNTING INSTRUCTIONS supplied with the gearbox.

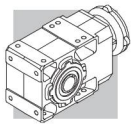

A 35...M

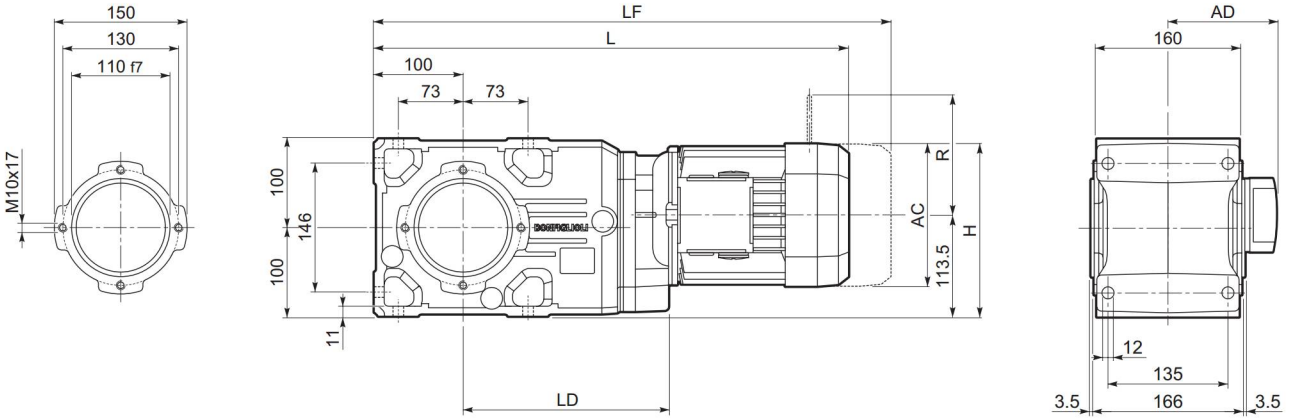

									M...FD M...FA		M...FD		M...FA	
			AC	H	L	LD	AD	Kg	LF	Kg	R	AD	R	AD
A 35 2	**S1**	**M1**	138	182.5	514.5	217.5	108	34	575.5	36	103	135	124	108
A 35 2	**S2**	**M2S**	156	191.5	543.5	229.5	119	37	613.5	41	129	146	134	119
A 35 2	**S3**	**M3S**	195	211	586.5	239.5	142	42	682.5	50	160	158	160	142
A 35 2	**S3**	**M3L**	195	211	618.5	239.5	142	50	709.5	57	160	158	160	142
A 35 2	**S4**	**M4S**	258	242.5	726.5	—	193	89	835.5	107	226	210	217	193
A 35 2	**S4**	**M4L**	258	242.5	761.5	—	193	97	860.5	115	226	210	217	193
A 35 3	**S05**	**M05S**	121	174	543	—	95	33	609	34	96	122	116	95
A 35 3	**S1**	**M1**	138	182.5	572	—	108	35	633	38	103	135	124	108
A 35 3	**S2**	**M2S**	156	191.5	601	—	119	37	671	41	129	146	134	119
A 35 3	**S3**	**M3S**	195	211	644	—	142	42	740	50	160	158	160	142
A 35 3	**S3**	**M3L**	195	211	676	—	142	50	767	57	160	158	160	142

A 35...P(IEC)

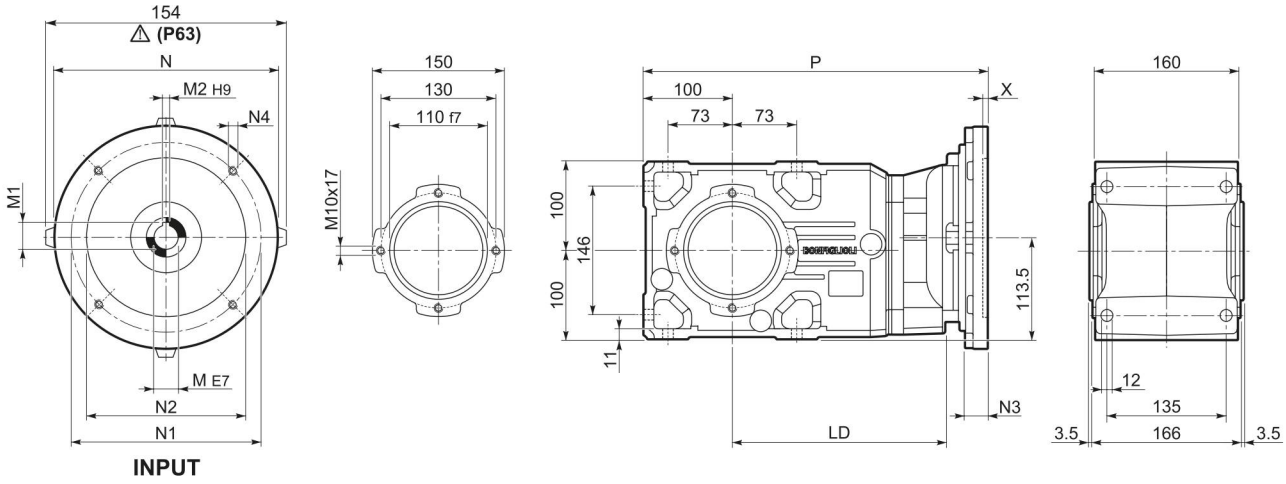

		LD	M	M1	M2	N	N1	N2	N3	N4	X	P	Kg
A 35 2	**P63**	229.5	11	12.8	4	140	115	95	—	M8x19	4	359.5	28
A 35 2	**P71**	229.5	14	16.3	5	160	130	110	—	M8x16	4.5	359.5	28
A 35 2	**P80**	239.5	19	21.8	6	200	165	130	—	M10x12	4	379	29
A 35 2	**P90**	239.5	24	27.3	8	200	165	130	—	M10x12	4	379	29
A 35 2	**P100**	239.5	28	31.3	8	250	215	180	—	M12x16	4.5	389	32
A 35 2	**P112**	239.5	28	31.3	8	250	215	180	—	M12x16	4.5	389	32
A 35 2	**P132**	—	38	41.3	10	300	265	230	16	14	5	425.5	40
A 35 3	**P63**	—	11	12.8	4	140	115	95	—	M8x19	4	417	29
A 35 3	**P71**	—	14	16.3	5	160	130	110	—	M8x16	4.5	417	29
A 35 3	**P80**	—	19	21.8	6	200	165	130	—	M10x12	4	436.5	30
A 35 3	**P90**	—	24	27.3	8	200	165	130	—	M10x12	4	436.5	30
A 35 3	**P100**	—	28	31.3	8	250	215	180	—	M12x16	4.5	446.5	34
A 35 3	**P112**	—	28	31.3	8	250	215	180	—	M12x16	4.5	446.5	34

A 35...HS

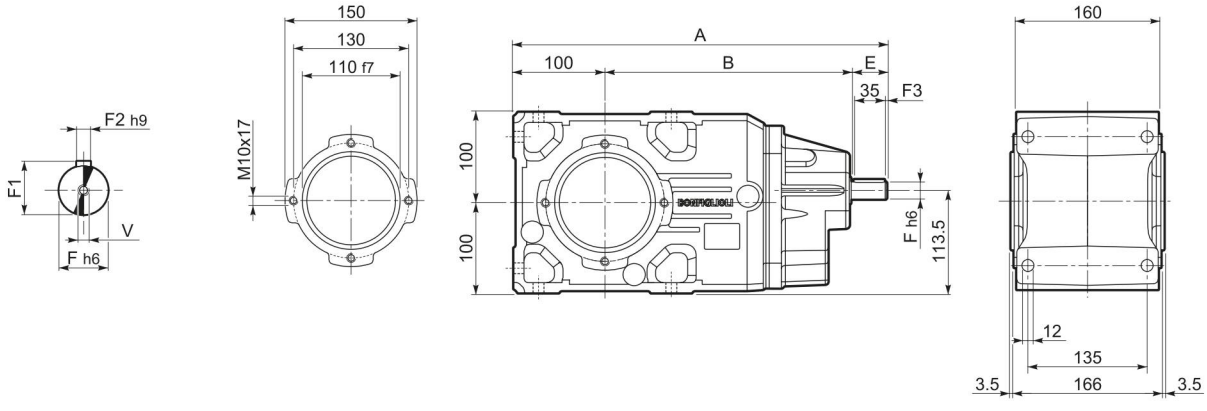

		A	B	E	F	F1	F2	F3	F4	V	Kg
A 35 2	**HS**	409.5	269.5	40	19	21.5	6	2.5	35	M6x16	29
A 35 3		424	284	40	16	18	5	2.5	35	M6x16	29

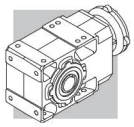

A 35...SK / SC

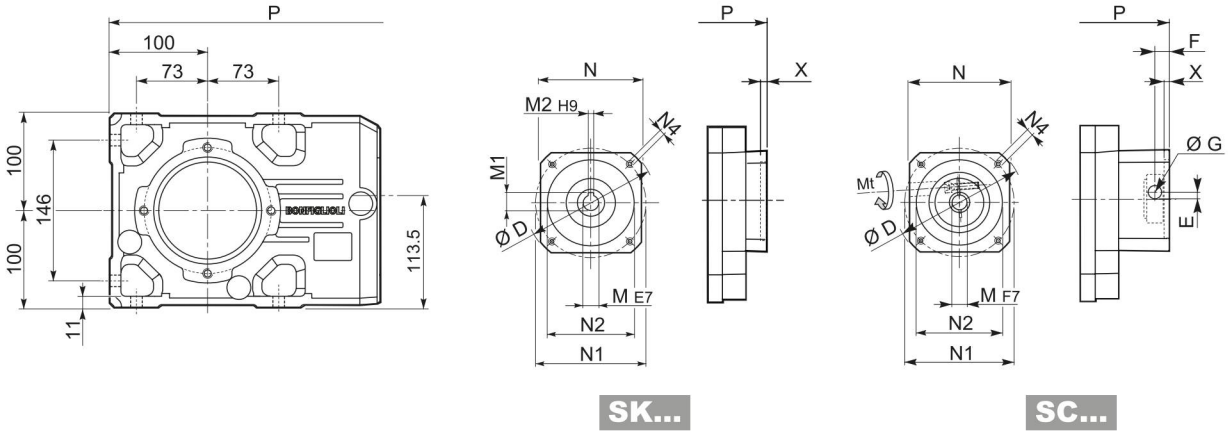

SK...

SC...

		D	M	M1	M2	N	N1	N2	N4	X	P 2x	P 3x	Kg
A 35 2/3	**SK60A**	102	11	12.8	4	82	75	60	M5x10	3.5	331	388.5	27/28
A 35 2/3	**SK60B**	102	14	16.3	5	82	75	60	M5x10	4	338	395.5	28/29
A 35 2/3	**SK80A**	115	14	16.3	5	90	100	80	M6x12	4	338	395.5	28/29
A 35 2/3	**SK80C**	120	19	21.8	6	96	100	80	M6x12	4	379	436.5	29/30
A 35 2/3	**SK95A**	130	14	16.3	5	102	115	95	M8x12	4	379	436.5	29/30
A 35 2/3	**SK95B**	130	19	21.8	6	102	115	95	M8x12	4	379	436.5	29/30
A 35 2/3	**SK95C**	130	24	27.3	8	102	115	95	M8x12	4	379	436.5	29/30
A 35 2/3	**SK110A**	150	19	21.8	6	120	130	110	M8x12	5	379	436.5	29/30
A 35 2/3	**SK110B**	150	24	27.3	8	120	130	110	M8x12	5	379	436.5	29/30
A 35 2	**SK130A**	188	24	27.3	8	142	165	130	M10x20	5	379	—	30

		Mt		D	E	F	G	M	N	N1	N2	N4	X	P 2x	P 3x	Kg
A 35 2/3	**SC60A**	M6	15 Nm	102	7	12.5	12.5	11	82	75	60	M5x10	4	358	415.5	28/29
A 35 2/3	**SC60B**	M6	15 Nm	102	7	12.5	12.5	14	82	75	60	M5x10	4	358	415.5	29/30
A 35 2/3	**SC80A**	M6	15 Nm	115	6	12.5	12.5	14	90	100	80	M6x12	4	358	415.5	29/30
A 35 2/3	**SC80C**	M6	15 Nm	120	15.5	14.5	17.75	19	96	100	80	M6x12	4	402.5	460	30/31
A 35 2/3	**SC95A**	M6	15 Nm	130	16.5	15	17.75	14	102	115	95	M8x16	4	402.5	460	30/31
A 35 2/3	**SC95B**	M6	15 Nm	130	16.5	15	17.75	19	102	115	95	M8x16	4	402.5	460	30/31
A 35 2/3	**SC95C**	M6	15 Nm	130	16.5	15	17.75	24	102	115	95	M8x16	4	402.5	460	30/31
A 35 2/3	**SC110A**	M6	15 Nm	150	16.5	16	17.75	19	120	130	110	M8x16	5	402.5	460	32/33
A 35 2/3	**SC110B**	M6	15 Nm	150	16.5	16	17.75	24	120	130	110	M8x16	5	402.5	460	32/33
A 35 2	**SC130A**	M6	15 Nm	188	19	16	17.75	24	142	165	130	M10x20	5	402.5	—	33

A 35...F...

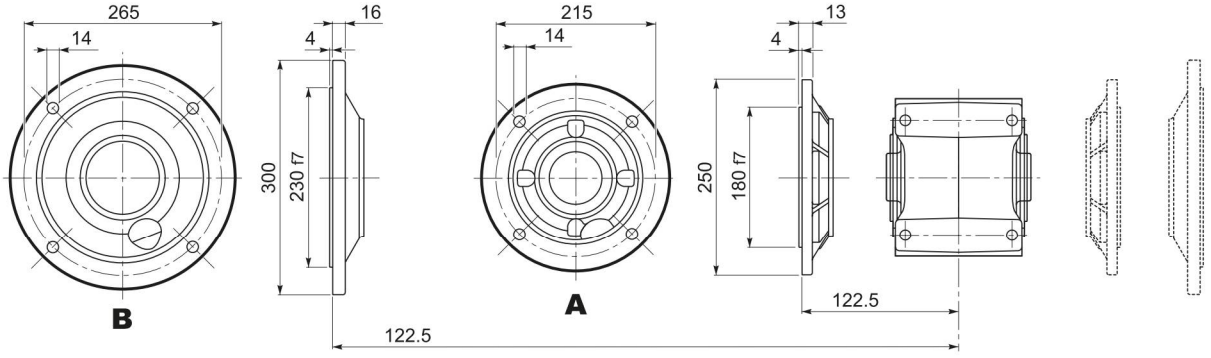

Bonfiglioli Riduttori

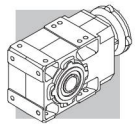

A 35

A 35...UR

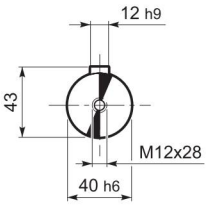

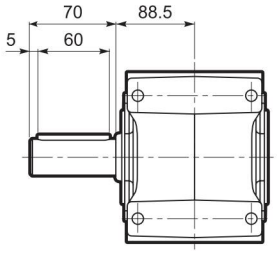

A 35...UD

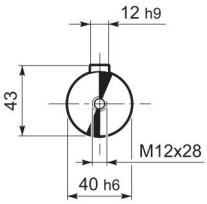

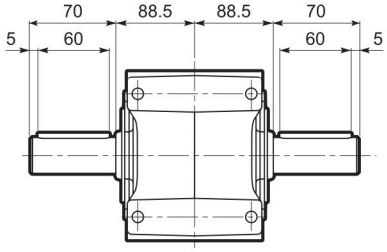

A 35...UH

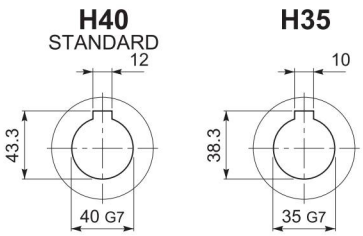

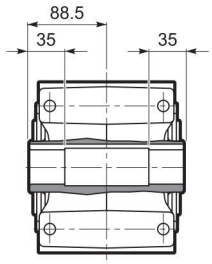

A 35...US

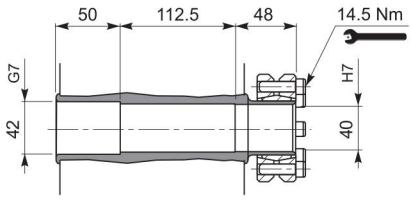

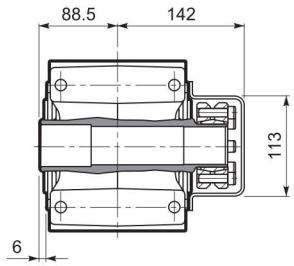

A 35...QF

	Ø
QF35	35
QF40	40

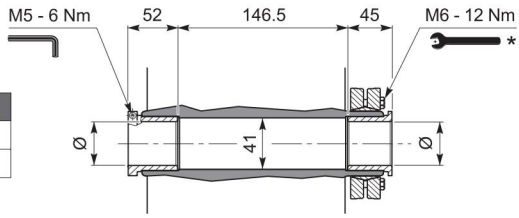

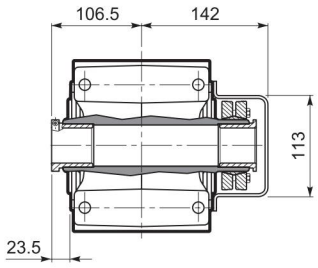

A 35...UV

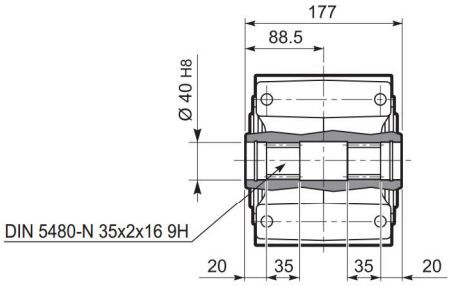

* Follow the MOUNTING INSTRUCTIONS supplied with the gearbox.

A 41...M

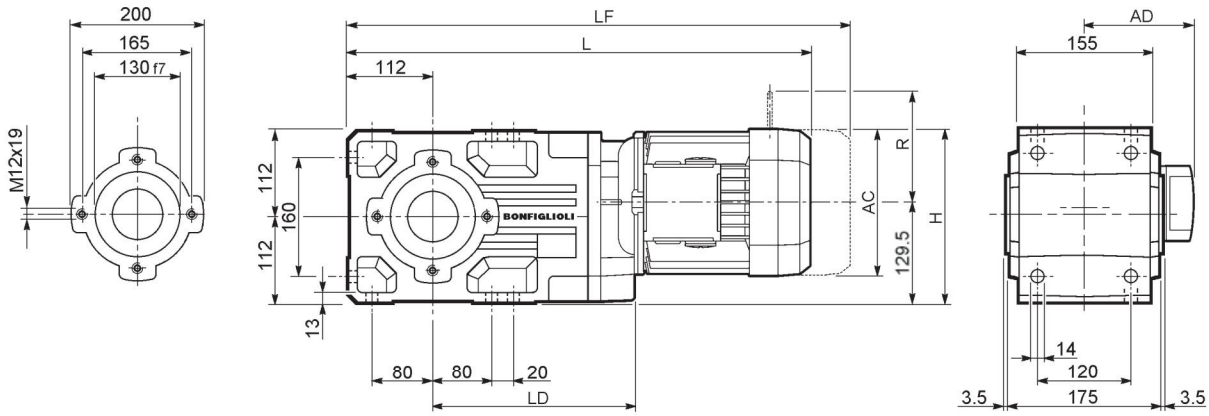

									M...FD M...FA		M...FD		M...FA	
			AC	H	L	LD	AD	Kg	LF	Kg	R	AD	R	AD
A 41 2	**S1**	**M1**	138	198.5	530	216.5	108	41	591	44	103	135	124	108
A 41 2	**S2**	**M2S**	156	207.5	559	232	119	45	629	49	129	146	134	119
A 41 2	**S3**	**M3S**	195	227	602	248	142	50	698	58	160	158	160	142
A 41 2	**S3**	**M3L**	195	227	634	248	142	58	725	65	160	158	160	142
A 41 2	**S4**	**M4**	258	258.5	742	—	193	92	851	110	226	210	217	193
A 41 2	**S4**	**M4LC**	258	258.5	777	—	193	100	876	118	226	210	217	193
A 41 3	**S05**	**M05**	121	245	562.5	—	95	44	628.5	46	96	122	116	95
A 41 3	**S1**	**M1**	138	198.5	591.5	—	108	46	652.5	49	103	135	124	108
A 41 3	**S2**	**M2S**	156	207.5	620.5	—	119	50	690.5	58	129	146	134	119
A 41 3	**S3**	**M3S**	195	227	663.5	—	142	55	759.5	62	160	158	160	142
A 41 3	**S3**	**M3L**	195	227	695.5	—	142	61	786.5	68	160	158	160	142

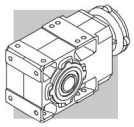

A 41...P(IEC)

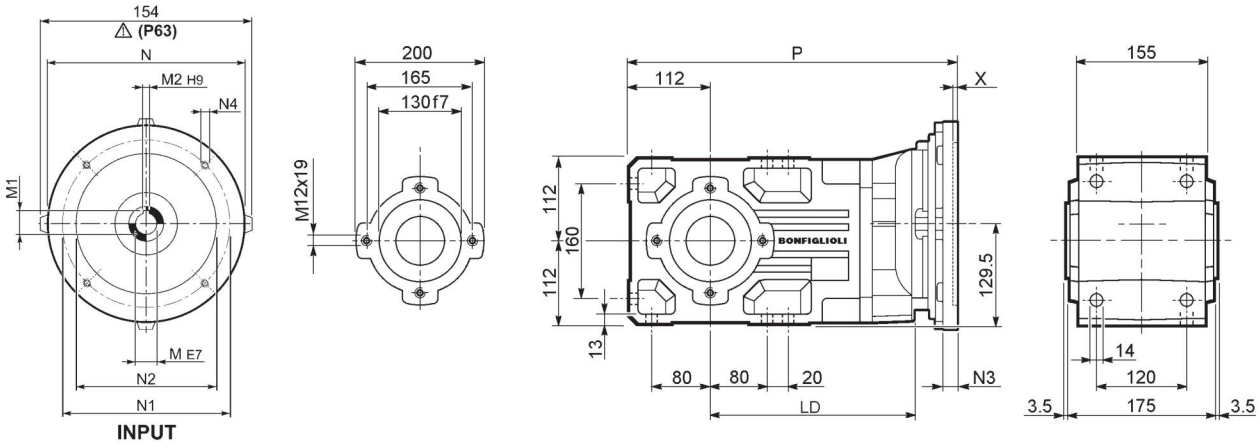

		LD	M	M1	M2	N	N1	N2	N3	N4	X	P	Kg
A 41 2	**P63**	232	11	12.8	4	140	115	95	—	M8x19	4	375	37
A 41 2	**P71**	232	14	16.3	5	160	130	110	—	M8x16	4.5	375	38
A 41 2	**P80**	248	19	21.8	6	200	165	130	—	M10x12	4	394.5	39
A 41 2	**P90**	248	24	27.3	8	200	165	130	—	M10x12	4	394.5	39
A 41 2	**P100**	—	28	31.3	8	250	215	180	—	M12x16	4.5	404.5	43
A 41 2	**P112**	—	28	31.3	8	250	215	180	—	M12x16	4.5	404.5	43
A 41 2	**P132**	—	38	41.3	10	300	265	230	16	14	5	441	46
A 41 3	**P63**	—	11	12.8	4	140	115	95	—	M8x19	4	436.5	39
A 41 3	**P71**	—	14	16.3	5	160	130	110	—	M8x16	4.5	436.5	39
A 41 3	**P80**	—	19	21.8	6	200	165	130	—	M10x12	4	456	40
A 41 3	**P90**	—	24	27.3	8	200	165	130	—	M10x12	4	456	40
A 41 3	**P100**	—	28	31.3	8	250	215	180	—	M12x16	4.5	466	44
A 41 3	**P112**	—	28	31.3	8	250	215	180	—	M12x16	4.5	466	44

A 41...HS

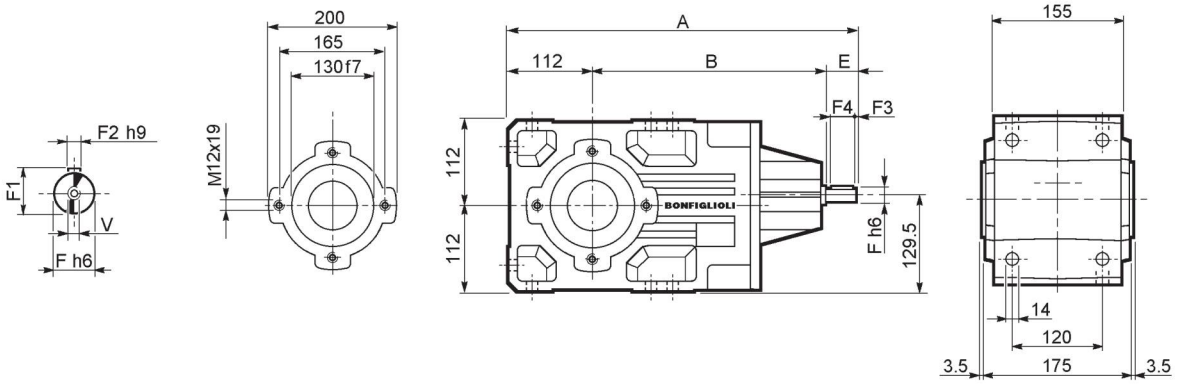

		A	B	E	F	F1	F2	F3	F4	V	Kg
A 41 2	**HS**	464	302.5	50	24	27	8	2.5	45	M8x19	40.7
A 41 3		486.5	334.5	40	19	21.5	6	2.5	35	M6x16	39.5

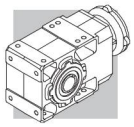

A 41...SK / SC

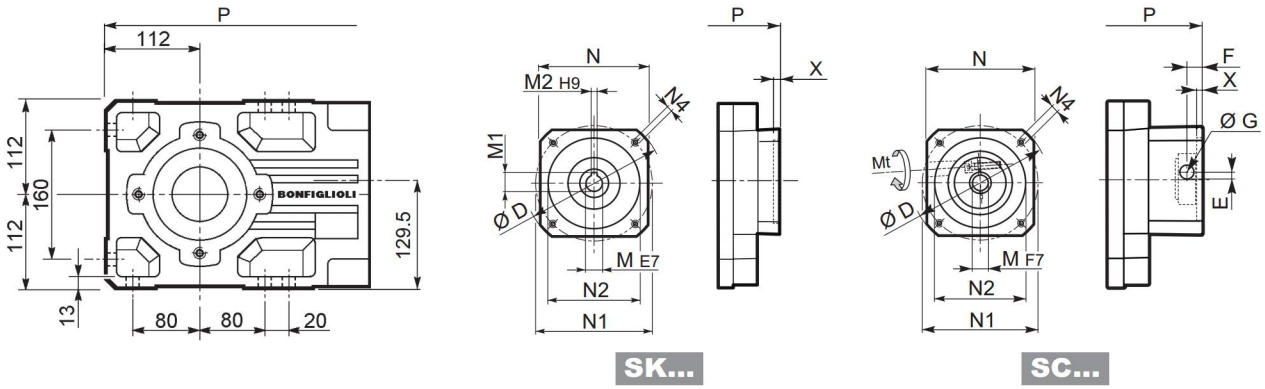

		D	M	M1	M2	N	N1	N2	N4	X	P 2x	P 3x	Kg
A41 3	**SK60A**	102	11	12.8	4	82	75	60	M5x10	3.5	—	408	40
A41 3	**SK60B**	102	14	16.3	5	82	75	60	M5x10	4	—	415	40
A41 3	**SK80A**	115	14	16.3	5	90	100	80	M6x12	4	—	415	40
A41 2	**SK80B**	120	14	16.3	5	96	100	80	M6x12	4	394.5	—	39
A41 2/3	**SK80C**	120	19	21.8	6	96	100	80	M6x12	4	394.5	456	39/40
A41 2/3	**SK95A**	130	14	16.3	5	102	115	95	M8x12	4	394.5	456	39/40
A41 2/3	**SK95B**	130	19	21.8	6	102	115	95	M8x12	4	394.5	456	39/41
A41 2/3	**SK95C**	130	24	27.3	8	102	115	95	M8x12	4	394.5	456	39/44
A41 2/3	**SK110A**	150	19	21.8	6	120	130	110	M8x12	5	394.5	456	39/44
A41 2/3	**SK110B**	150	24	27.3	8	120	130	110	M8x12	5	394.5	456	39/44
A41 2	**SK130A**	188	24	27.3	8	142	165	130	M10x20	5	394.5	—	41
A41 2	**SK130B**	189	32	35.3	10	160	165	130	M10x20	5	441	—	43
A41 2	**SK180A**	240	32	35.3	10	192	215	180	M12x19	5	441	—	43
A41 2	**SK180B**	240	38	41.3	10	192	215	180	M12x19	5	441	—	43

		Mt		D	E	F	G	M	N	N1	N2	N4	X	P 2x	P 3x	Kg
A41 3	**SC60A**	M6	15 Nm	102	7	12.5	12.5	11	82	75	60	M5x10	4	—	435	41
A41 3	**SC60B**	M6	15 Nm	102	7	12.5	12.5	14	82	75	60	M5x10	4	—	435	41
A41 3	**SC80A**	M6	15 Nm	115	6	12.5	12.5	14	90	100	80	M6x12	4	—	435	41
A41 2	**SC80B**	M6	15 Nm	120	15.5	14.5	17.75	14	96	100	80	M6x12	4	418	—	40
A41 2/3	**SC80C**	M6	15 Nm	120	15.5	14.5	17.75	19	96	100	80	M6x12	4	418	479.5	40/41
A41 2/3	**SC95A**	M6	15 Nm	130	16.5	15	17.75	14	102	115	95	M8x16	4	418	479.5	40/42
A41 2/3	**SC95B**	M6	15 Nm	130	16.5	15	17.75	19	102	115	95	M8x16	4	418	479.5	40/42
A41 2/3	**SC95C**	M6	15 Nm	130	16.5	15	17.75	24	102	115	95	M8x16	4	418	479.5	40/43
A41 2/3	**SC110A**	M6	15 Nm	150	16.5	16	17.75	19	120	130	110	M8x16	5	418	479.5	41/47
A41 2/3	**SC110B**	M6	15 Nm	150	16.5	16	17.75	24	120	130	110	M8x16	5	418	479.5	41/47
A41 2	**SC130A**	M6	15 Nm	188	19	16	17.75	24	142	165	130	M10x20	5	418	—	42
A41 2	**SC130B**	M8	36 Nm	189	20	17	17.75	32	160	165	130	M10x20	5	464	—	46
A41 2	**SC180A**	M8	36 Nm	240	20	17.5	17.75	32	192	215	180	M12x24	5	468	—	46
A41 2	**SC180B**	M8	36 Nm	240	20	17.5	17.75	38	192	215	180	M12x24	5	468	—	46

A 41...F...

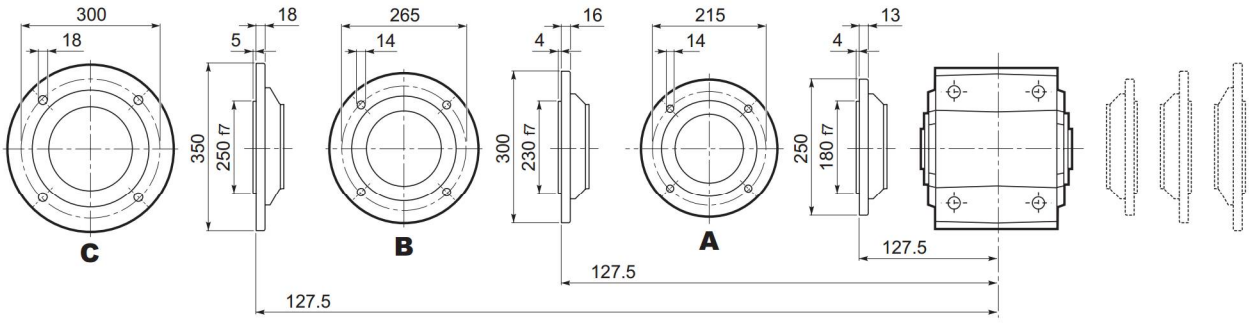

Bonfiglioli Riduttori

A 41

A 41...UR

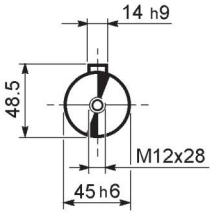

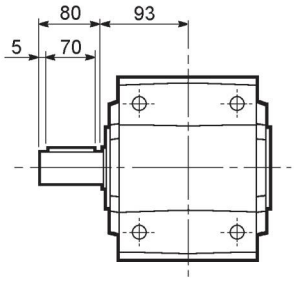

A 41...UD

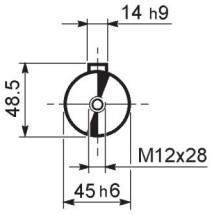

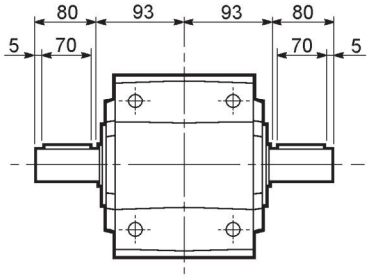

A 41...UH

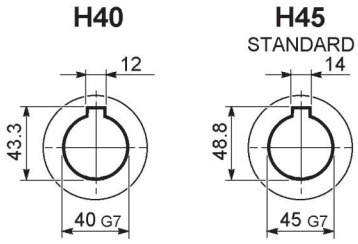

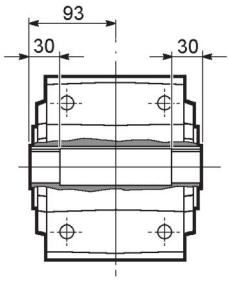

A 41...US

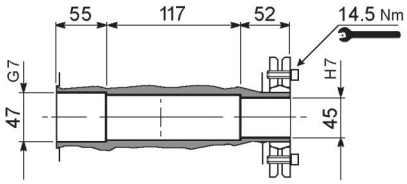

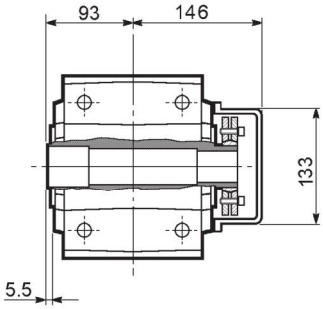

A 41...QF

	Ø
QF40	40
QF45	45

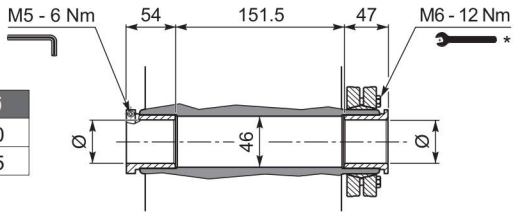

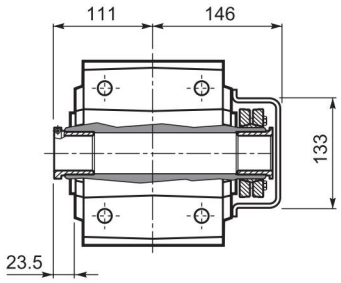

A 41...UV

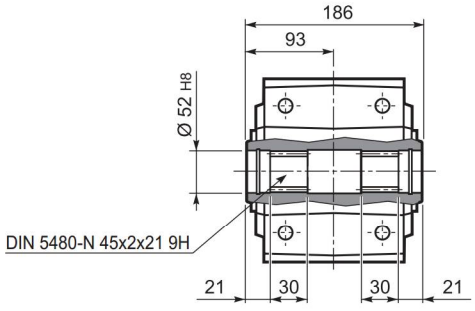

* Follow the MOUNTING INSTRUCTIONS supplied with the gearbox.

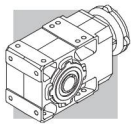

A 50...M

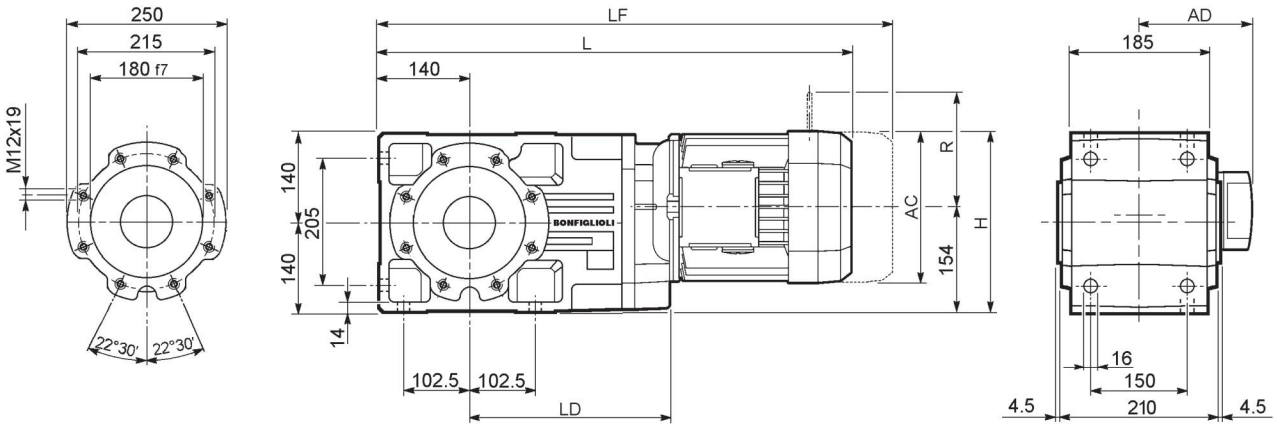

									M...FD M...FA		M...FD		M...FA	
			AC	H	L	LD	AD	Kg	LF	Kg	R	AD	R	AD
A 50 2/3	**S1**	**M1**	138	223	609.5	—	108	66	670.5	69	103	135	124	108
A 50 2/3	**S2**	**M2S**	156	232	638.5	284.5	119	68	708.5	72	129	146	134	119
A 50 2/3	**S3**	**M3S**	195	251.5	681.5	299.5	142	73	777.5	81	160	158	160	142
A 50 2/3	**S3**	**M3L**	195	251.5	713.5	299.5	142	81	804.5	88	160	158	160	142
A 50 2/3	**S4**	**M4**	258	283	821.5	284.5	193	115	930.5	133	226	210	217	193
A 50 2/3	**S4**	**M4LC**	258	283	856.5	284.5	193	123	955.5	141	226	210	217	193
A 50 2/3	**S5**	**M5S**	310	309	908	—	245	143	1048	173	266	245	247	245
A 50 2/3	**S5**	**M5L**	310	309	952	—	245	159	1092	189	266	245	247	245
A 50 4	**S1**	**M1**	138	223	681	—	108	67	742	70	103	135	124	108
A 50 4	**S2**	**M2S**	156	232	710	—	119	71	780	75	129	146	134	119
A 50 4	**S3**	**M3S**	195	251.5	753	—	142	76	849	76	160	158	160	142
A 50 4	**S3**	**M3L**	195	251.5	785	—	142	83	876	78	160	158	160	142

A 50...P(IEC)

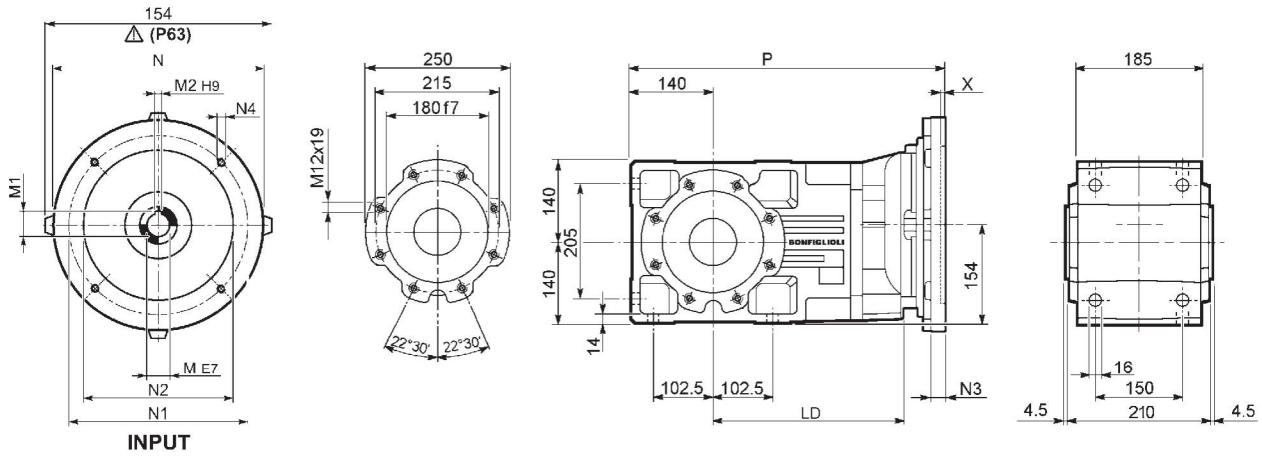

		LD	M	M1	M2	N	N1	N2	N3	N4	X	P	Kg
A 50 2/3	**P63**	284.5	11	12.8	4	140	115	95	—	M8x19	4	454.5	60
A 50 2/3	**P71**	284.5	14	16.3	5	160	130	110	—	M8x16	4.5	454.5	60
A 50 2/3	**P80**	299.5	19	21.8	6	200	165	130	—	M10x12	4	474	61
A 50 2/3	**P90**	299.5	24	27.3	8	200	165	130	—	M10x12	4	474	61
A 50 2/3	**P100**	284.5	28	31.3	8	250	215	180	—	M12x16	4.5	484	65
A 50 2/3	**P112**	284.5	28	31.3	8	250	215	180	—	M12x16	4.5	484	65
A 50 2/3	**P132**	284.5	38	41.3	10	300	265	230	16	14	5	520.5	68
A 50 2/3	**P160**	—	42	45.3	12	350	300	250	23	18	5.5	571	72
A 50 2/3	**P180**	—	48	51.8	14	350	300	250	23	18	5.5	571	72
A 50 4	**P63**	—	11	12.8	4	140	115	95	—	M8x19	4	526	62
A 50 4	**P71**	—	14	16.3	5	160	130	110	—	M8x16	4.5	526	62
A 50 4	**P80**	—	19	21.8	6	200	165	130	—	M10x12	4	545.5	63
A 50 4	**P90**	—	24	27.3	8	200	165	130	—	M10x12	4	545.5	63
A 50 4	**P100**	—	28	31.3	8	250	215	180	—	M12x16	4.5	555.5	67
A 50 4	**P112**	—	28	31.3	8	250	215	180	—	M12x16	4.5	555.5	67

A 50...HS

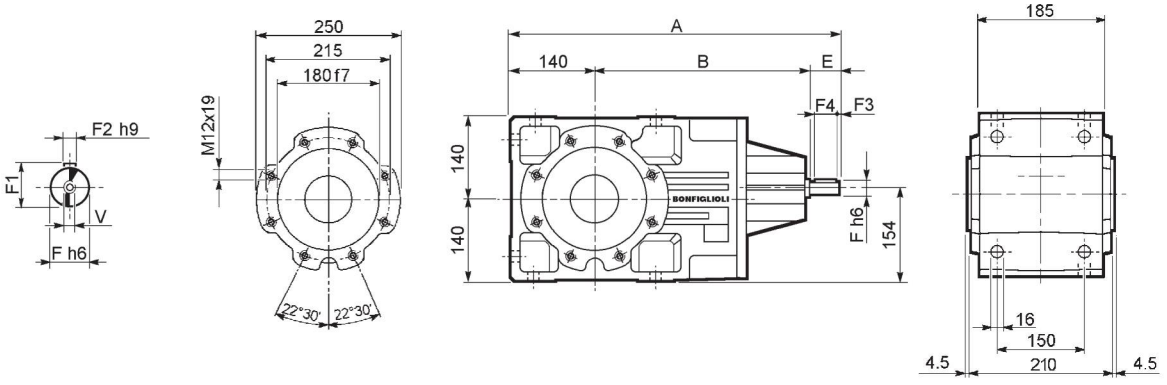

		A	B	E	F	F1	F2	F3	F4	V	Kg
A 50 2		543.5	353.5	50	24	27	8	2.5	45	M8x19	72
A 50 3	**HS**	543.5	353.5	50	24	27	8	2.5	45	M8x19	76
A 50 4		576	396	40	19	21.5	6	2.5	35	M6x16	77

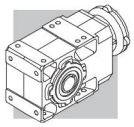

A 50...SK / SC

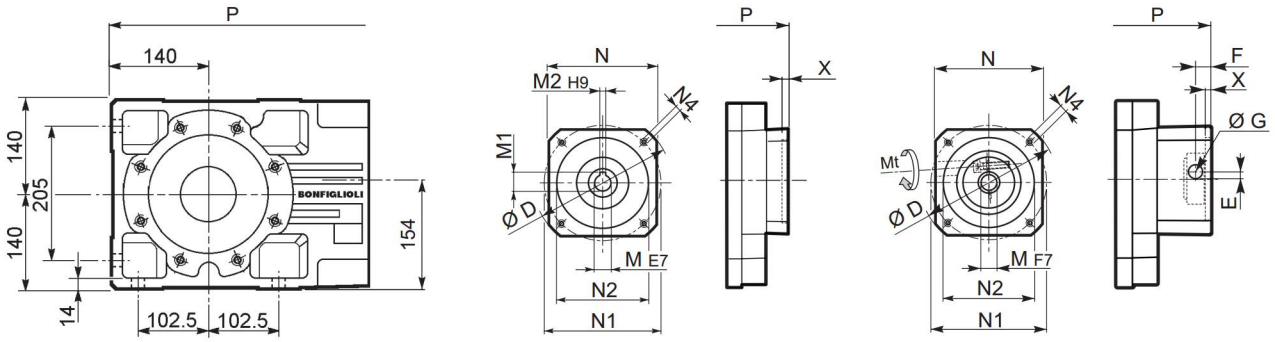

		D	M	M1	M2	N	N1	N2	N4	X	P 2/3x	P 4x	Kg
A 50 2/3	**SK80B**	120	14	16.3	5	96	100	80	M6x12	4	474	—	61/61
A 50 2/3/4	**SK80C**	120	19	21.8	6	96	100	80	M6x12	4	474	545.5	61/61/63
A 50 2/3/4	**SK95A**	130	14	16.3	5	102	115	95	M8x12	4	474	545.5	61/61/63
A 50 2/3/4	**SK95B**	130	19	21.8	6	102	115	95	M8x12	4	474	545.5	61/61/63
A 50 2/3/4	**SK95C**	130	24	27.3	8	102	115	95	M8x12	4	474	545.5	61/61/63
A 50 2/3/4	**SK110A**	150	19	21.8	6	120	130	110	M8x12	5	474	545.5	61/61/65
A 50 2/3/4	**SK110B**	150	24	27.3	8	120	130	110	M8x12	5	474	575	61/61/65
A 50 2/3/4	**SK130A**	188	24	27.3	8	142	165	130	M10x20	5	474	575	63/63/66
A 50 2/3	**SK130B**	189	32	35.3	10	160	165	130	M10x20	5	520.5	—	69/69
A 50 2/3	**SK180A**	240	32	35.3	10	192	215	180	M12x19	5	520.5	—	69/69
A 50 2/3	**SK180B**	240	38	41.3	10	192	215	180	M12x19	5	520.5	—	69/69

		Mt	D	E	F	G	M	N	N1	N2	N4	X	P 2/3x	P 3x	Kg
A 50 2/3	**SC80B**	M6 15 Nm	120	15.5	14.5	17.75	14	96	100	80	M6x12	4	497.5	—	62/62
A 50 2/3/4	**SC80C**	M6 15 Nm	120	15.5	14.5	17.75	19	96	100	80	M6x12	4	497.5	569	62/62/64
A 50 2/3/4	**SC95A**	M6 15 Nm	130	16.5	15	17.75	14	102	115	95	M8x16	4	497.5	569	62/62/64
A 50 2/3/4	**SC95B**	M6 15 Nm	130	16.5	15	17.75	19	102	115	95	M8x16	4	497.5	569	62/62/64
A 50 2/3/4	**SC95C**	M6 15 Nm	130	16.5	15	17.75	24	102	115	95	M8x16	4	497.5	569	62/62/64
A 50 2/3/4	**SC110A**	M6 15 Nm	150	16.5	16	17.75	19	120	130	110	M8x16	5	497.5	569	63/63/66
A 50 2/3/4	**SC110B**	M6 15 Nm	150	16.5	16	17.75	24	120	130	110	M8x16	5	497.5	569	63/63/66
A 50 2/3/4	**SC130A**	M6 15 Nm	188	19	16	17.75	24	142	165	130	M10x20	5	497.5	569	64/64/67
A 50 2/3	**SC130B**	M8 36 Nm	189	20	17	17.75	32	160	165	130	M10x20	5	543.5	—	68/68
A 50 2/3	**SC180A**	M8 36 Nm	240	20	17.5	17.75	32	192	215	180	M12x24	5	547.5	—	68/68
A 50 2/3	**SC180B**	M8 36 Nm	240	20	17.5	17.75	38	192	215	180	M12x24	5	547.5	—	68/68

A 50...F...

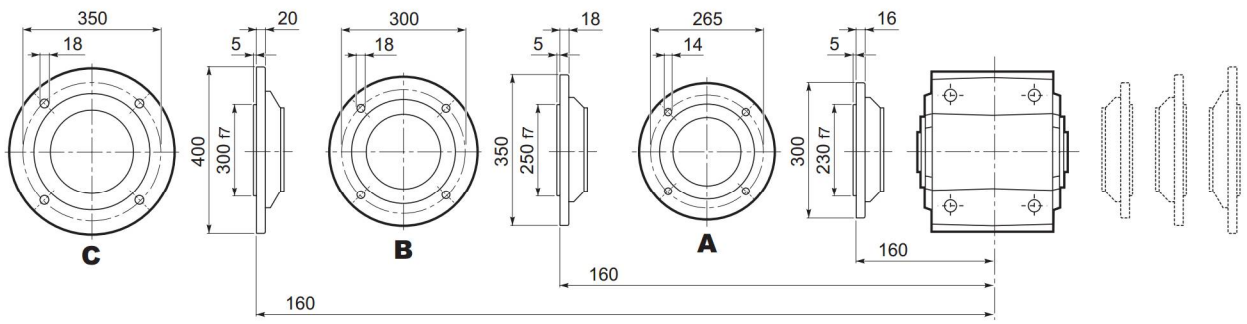

Bonfiglioli Riduttori

A 50

A 50...UR

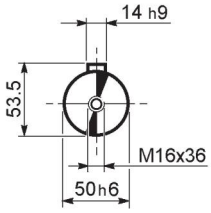

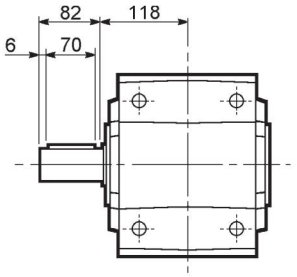

A 50...UD

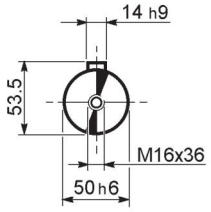

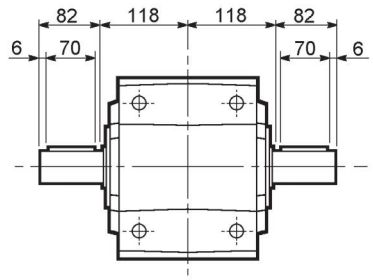

A 50...UH

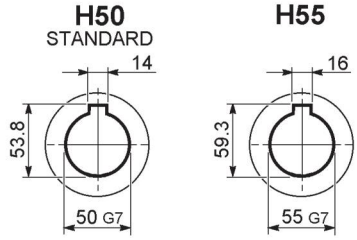

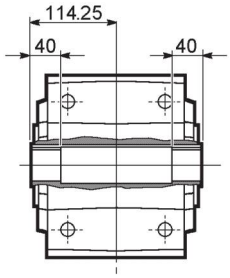

A 50...US

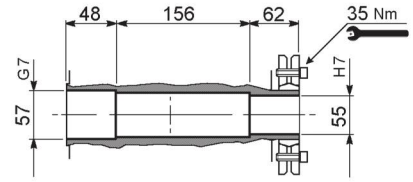

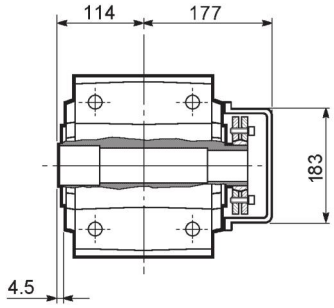

A 50...QF

	Ø
QF50	50
QF55	55

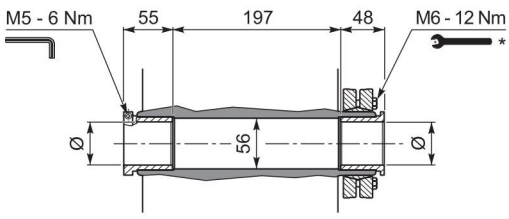

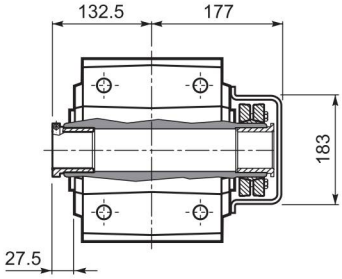

A 50...UV

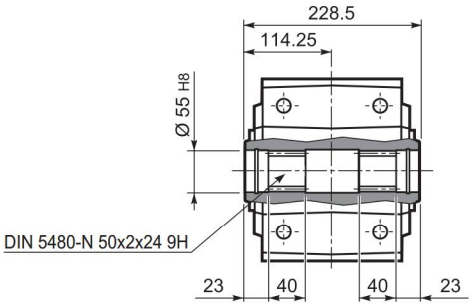

* Follow the MOUNTING INSTRUCTIONS supplied with the gearbox.

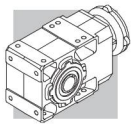

A 55...M

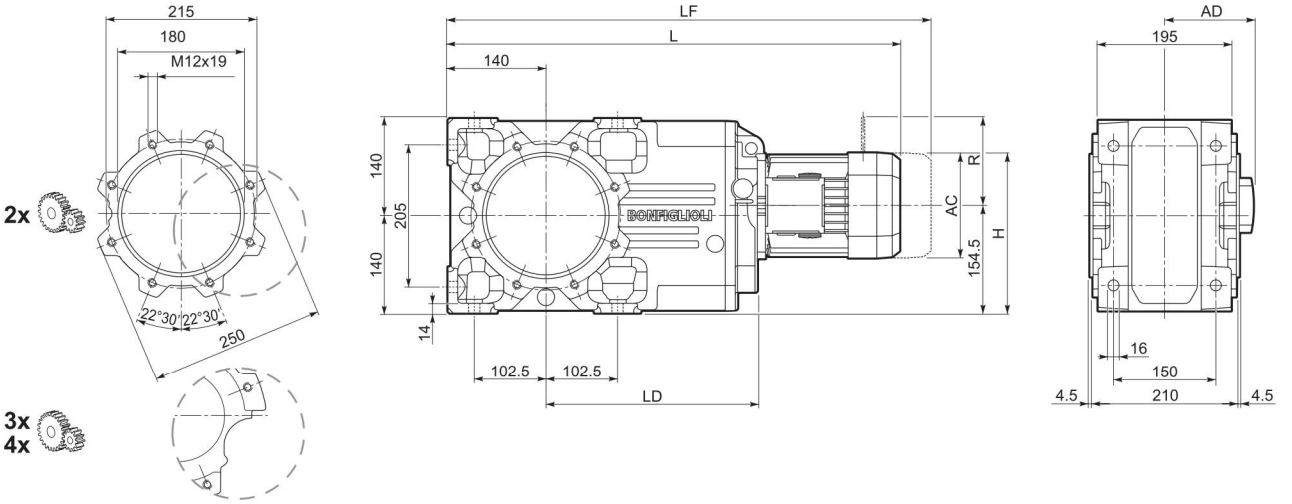

									M...FD M...FA		M...FD		M...FA	
			AC	H	L	LD	AD	Kg	LF	Kg	R	AD	R	AD
A 55 3	**S1**	**M1**	138	198.5	627.5	—	108	81	688.5	84	103	135	124	108
A 55 2/3	**S2**	**M2S**	156	232	656.5	302.5	119	88	726.5	92	129	146	134	119
A 55 2/3	**S3**	**M3S**	195	251	699.5	317.5	142	93	795.5	99	160	158	160	142
A 55 2/3	**S3**	**M3L**	195	251	731.5	317.5	142	101	822.5	108	160	158	160	142
A 55 2/3	**S4**	**M4**	258	283	839.5	302.5	193	135	948.5	153	226	210	217	193
A 55 2/3	**S4**	**M4LC**	258	283	874.5	302.5	193	143	973.5	161	226	210	217	193
A 55 2/3	**S5**	**M5S**	310	309.5	926	—	245	163	1066	193	266	245	247	245
A 55 2/3	**S5**	**M5L**	310	309.5	970	—	245	179	1110	209	266	245	247	245
A 55 4	**S1**	**M1**	138	223	699	—	108	82	760	85	103	135	124	108
A 55 4	**S2**	**M2S**	156	232	728	—	119	86	798	90	129	146	134	119
A 55 4	**S3**	**M3S**	195	251.5	771	—	142	91	867	98	160	158	160	142
A 55 4	**S3**	**M3L**	195	251.5	803	—	142	98	894	105	160	158	160	142

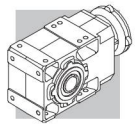

A 55...P(IEC)

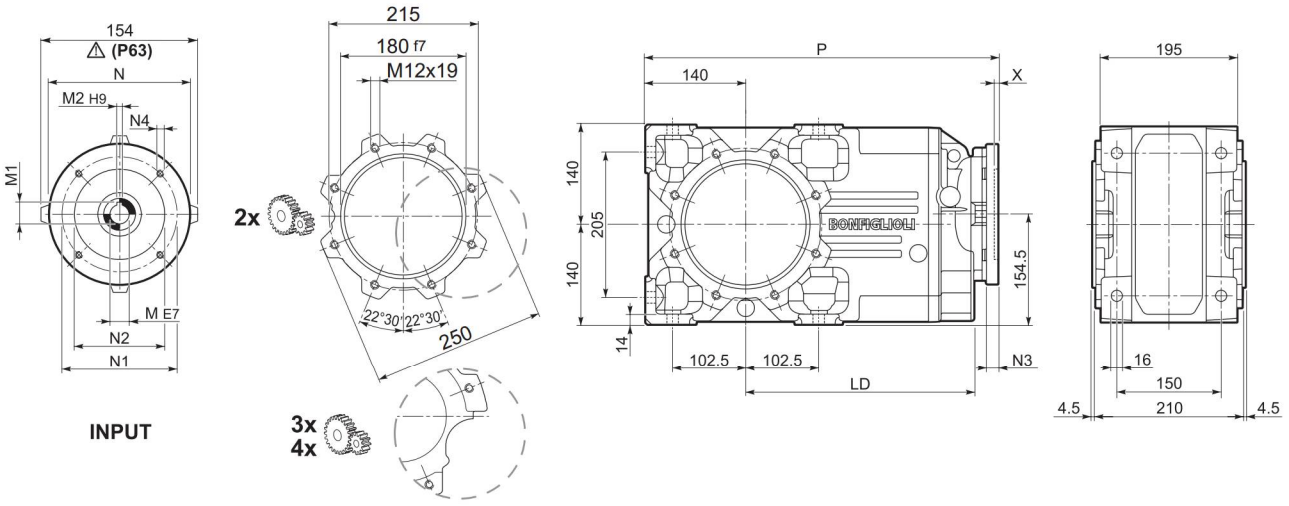

		LD	M	M1	M2	N	N1	N2	N3	N4	X	P	Kg
A 55 3	**P63**	302.5	11	12.8	4	140	115	95	—	M8x19	4	472.5	75
A 55 3	**P71**	302.5	14	16.3	5	160	130	110	—	M8x16	4.5	472.5	75
A 55 2/3	**P80**	317.5	19	21.8	6	200	165	130	—	M10x12	4	492	81
A 55 2/3	**P90**	317.5	24	27.3	8	200	165	130	—	M10x12	4	492	81
A 55 2/3	**P100**	302.5	28	31.3	8	250	215	180	—	M12x16	4.5	502	85
A 55 2/3	**P112**	302.5	28	31.3	8	250	215	180	—	M12x16	4.5	502	85
A 55 2/3	**P132**	302.5	38	41.3	10	300	265	230	16	14	5	538.5	93
A 55 2/3	**P160**	—	42	45.3	12	350	300	250	23	18	5.5	589	110
A 55 2/3	**P180**	—	48	51.8	14	350	300	250	23	18	5.5	589	110
A 55 4	**P63**	—	11	12.8	4	140	115	95	—	M8x19	4	544	77
A 55 4	**P71**	—	14	16.3	5	160	130	110	—	M8x16	4.5	544	77
A 55 4	**P80**	—	19	21.8	6	200	165	130	—	M10x12	4	563.5	78
A 55 4	**P90**	—	24	27.3	8	200	165	130	—	M10x12	4	563.5	78
A 55 4	**P100**	—	28	31.3	8	250	215	180	—	M12x16	4.5	573.5	82
A 55 4	**P112**	—	28	31.3	8	250	215	180	—	M12x16	4.5	573.5	82

A 55...HS

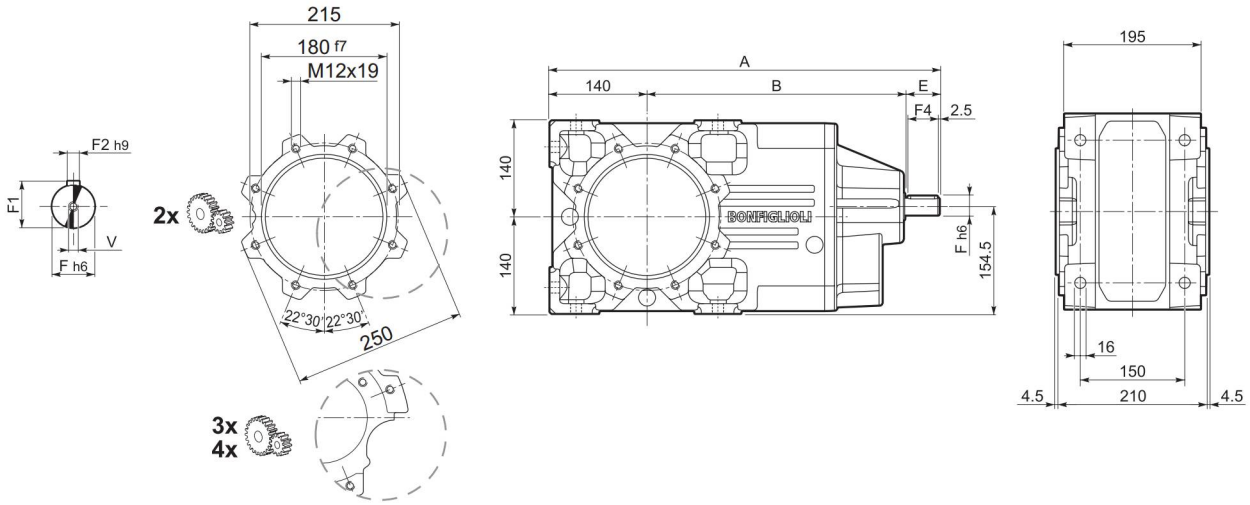

		A	B	E	F	F1	F2	F3	F4	V	Kg
A 55 2		561.5	371.5	50	24	27	8	2.5	45	M8x19	96
A 55 3	**HS**	561.5	371.5	50	24	27	8	2.5	45	M8x19	91
A 55 4		594	414	40	19	21.5	6	2.5	35	M6x16	92

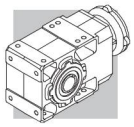

A 55...SK / SC

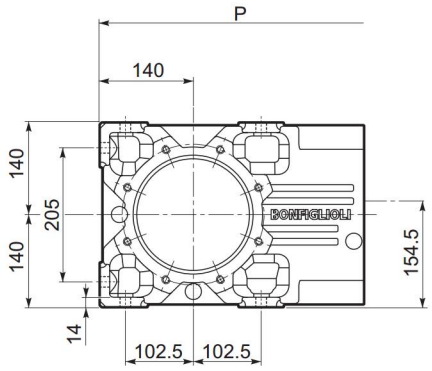

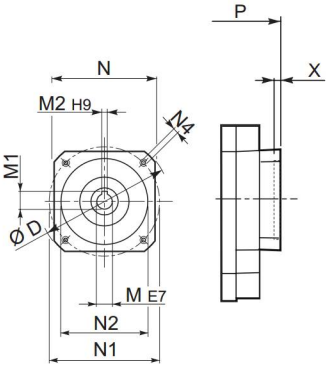

SK...

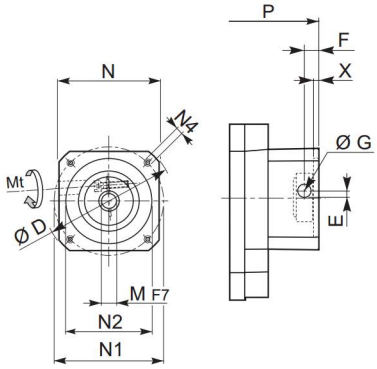

SC...

		D	M	M1	M2	N	N1	N2	N4	X	P 2/3x	P 4x	Kg
A 55 3	**SK80B**	120	14	16.3	5	96	100	80	M6x12	4	492	—	81
A 55 2/3/4	**SK80C**	120	19	21.8	6	96	100	80	M6x12	4	492	563.5	81/81/77
A 55 3/4	**SK95A**	130	14	16.3	5	102	115	95	M8x12	4	492	563.5	81/81/77
A 55 2/3/4	**SK95B**	130	19	21.8	6	102	115	95	M8x12	4	492	563.5	81/81/77
A 55 2/3/4	**SK95C**	130	24	27.3	8	102	115	95	M8x12	4	492	563.5	81/81/77
A 55 2/3/4	**SK110A**	150	19	21.8	6	120	130	110	M8x12	5	492	593	81/81/78
A 55 2/3/4	**SK110B**	150	24	27.3	8	120	130	110	M8x12	5	492	593	81/81/78
A 55 2/3/4	**SK130A**	188	24	27.3	8	142	165	130	M10x20	5	492	593	83/83/79
A 55 2/3	**SK130B**	189	32	35.3	10	160	165	130	M10x20	5	538.5	—	90/90
A 55 2/3	**SK180A**	240	32	35.3	10	192	215	180	M12x19	5	538.5	—	90/90
A 55 2/3	**SK180B**	240	38	41.3	10	192	215	180	M12x19	5	538.5	—	90/90

		Mt	D	E	F	G	M	N	N1	N2	N4	X	P 2/3x	P 3x	Kg
A 55 3	**SC80B**	M6 15 Nm	120	15.5	14.5	17.75	14	96	100	80	M6x12	4	515.5	—	82
A 55 2/3/4	**SC80C**	M6 15 Nm	120	15.5	14.5	17.75	19	96	100	80	M6x12	4	515.5	587	82/82/78
A 55 3/4	**SC95A**	M6 15 Nm	130	16.5	15	17.75	14	102	115	95	M8x16	4	515.5	587	82/82/78
A 55 2/3/4	**SC95B**	M6 15 Nm	130	16.5	15	17.75	19	102	115	95	M8x16	4	515.5	587	82/82/78
A 55 2/3/4	**SC95C**	M6 15 Nm	130	16.5	15	17.75	24	102	115	95	M8x16	4	515.5	587	82/82/78
A 55 2/3/4	**SC110A**	M6 15 Nm	150	16.5	16	17.75	19	120	130	110	M8x16	5	515.5	587	83/83/79
A 55 2/3/4	**SC110B**	M6 15 Nm	150	16.5	16	17.75	24	120	130	110	M8x16	5	515.5	587	83/83/79
A 55 2/3/4	**SC130A**	M6 15 Nm	188	19	16	17.75	24	142	165	130	M10x20	5	515.5	587	84/84/80
A 55 2/3	**SC130B**	M8 36 Nm	189	20	17	17.75	32	160	165	130	M10x20	5	561.5	—	93/93
A 55 2/3	**SC180A**	M8 36 Nm	240	20	17.5	17.75	32	192	215	180	M12x24	5	565.5	—	93/93
A 55 2/3	**SC180B**	M8 36 Nm	240	20	17.5	17.75	38	192	215	180	M12x24	5	565.5	—	93/93

A 55...F...

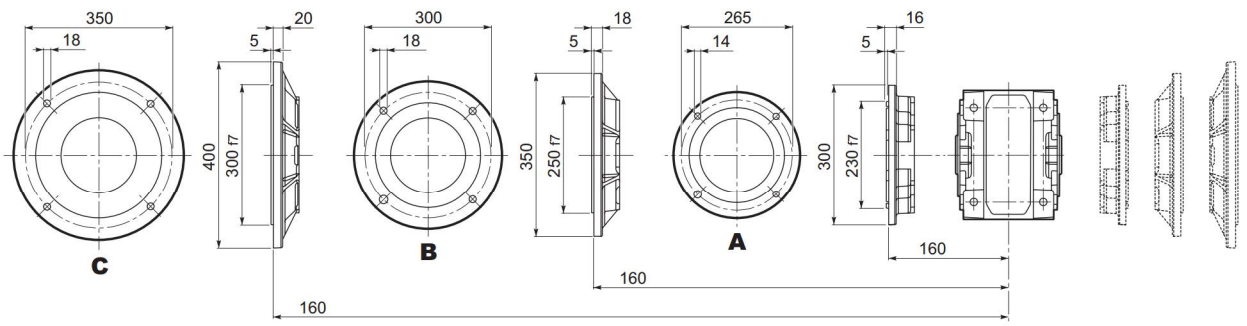

Bonfiglioli Riduttori

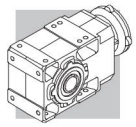

A 55

A 55...UR

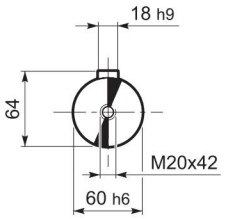

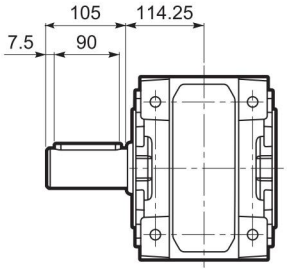

A 55...UD

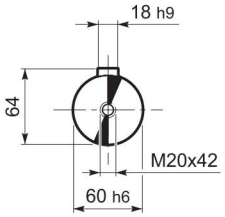

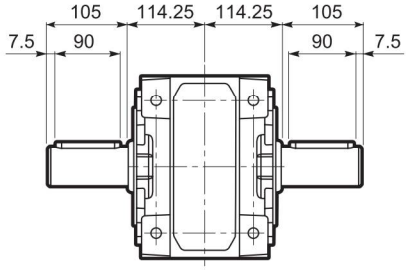

A 55...UH

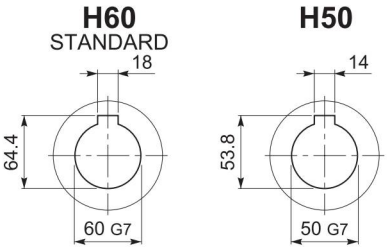

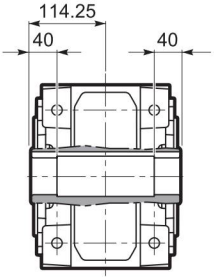

A 55...US

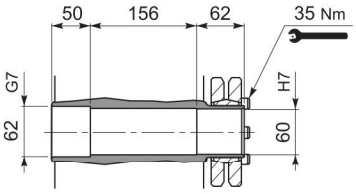

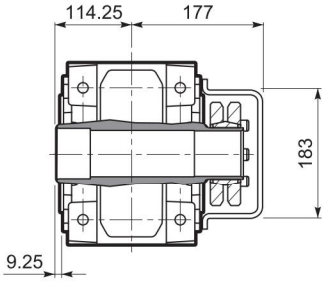

A 55...QF

	Ø
QF55	55
QF60	60

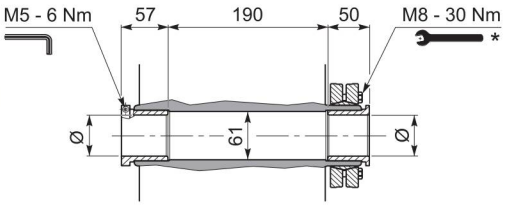

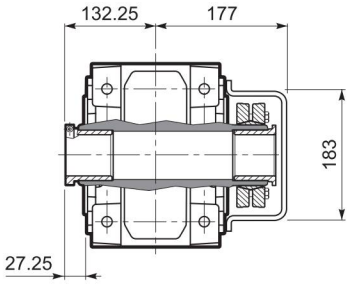

A 55...UV

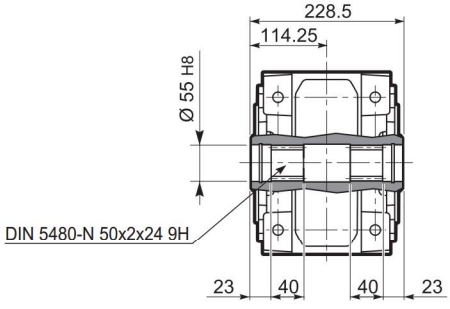

* Follow the MOUNTING INSTRUCTIONS supplied with the gearbox.

A 60...M

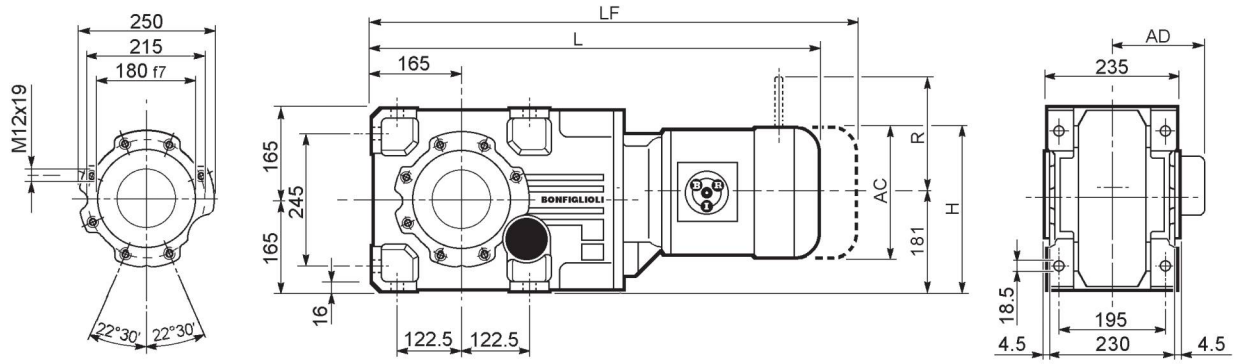

								M...FD M...FA		M...FD		M...FA	
			AC	H	L	AD	Kg	LF	Kg	R	AD	R	AD
A 60 2/3	**S2**	**M2S**	156	256.5	700.5	119	98	770.5	102	129	146	134	119
A 60 2/3	**S3**	**M3S**	195	276	743.5	142	103	839.5	111	160	158	160	142
A 60 2/3	**S3**	**M3L**	195	276	775.5	142	111	866.5	118	160	158	160	142
A 60 2/3	**S4**	**M4**	258	307.5	883.5	193	145	992.5	163	226	210	217	193
A 60 2/3	**S4**	**M4LC**	258	307.5	918.5	193	153	1017.5	171	226	210	217	193
A 60 2/3	**S5**	**M5S**	310	333.5	970	245	173	1110	203	266	245	247	245
A 60 2/3	**S5**	**M5L**	310	333.5	1014	245	189	1154	219	266	245	247	245
A 60 4	**S1**	**M1**	138	247.5	742	108	100	803	103	103	135	124	108
A 60 4	**S2**	**M2S**	156	256.5	771	119	104	841	108	129	146	134	119
A 60 4	**S3**	**M3S**	195	276	814	142	109	910	117	160	158	160	142
A 60 4	**S3**	**M3L**	195	276	846	142	117	937	124	160	158	160	142

A 60...P(IEC)

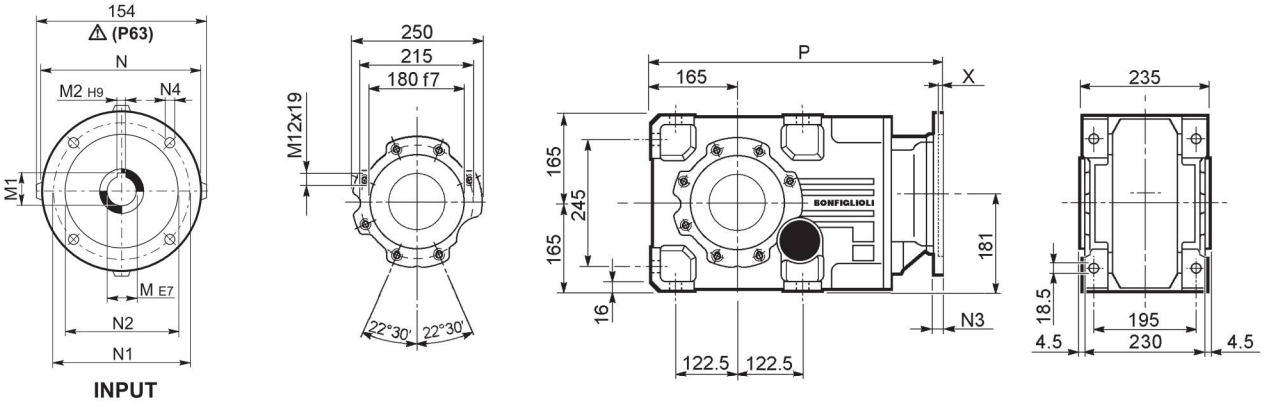

		M	M1	M2	N	N1	N2	N3	N4	X	P	Kg
A 60 3	**P63**	11	12.8	4	140	115	95	—	M8x19	4	516.5	90
A 60 3	**P71**	14	16.3	5	160	130	110	—	M8x16	4.5	516.5	90
A 60 2/3	**P80**	19	21.8	6	200	165	130	—	M10x12	4	536	91
A 60 2/3	**P90**	24	27.3	8	200	165	130	—	M10x12	4	536	91
A 60 2/3	**P100**	28	31.3	8	250	215	180	—	M12x16	4.5	546	95
A 60 2/3	**P112**	28	31.3	8	250	215	180	—	M12x16	4.5	546	95
A 60 2/3	**P132**	38	41.3	10	300	265	230	16	14	5	582.5	104
A 60 2/3	**P160**	42	45.3	12	350	300	250	23	18	5.5	633	121
A 60 2/3	**P180**	48	51.8	14	350	300	250	23	18	5.5	633	121
A 60 4	**P63**	11	12.8	4	140	115	95	—	M8x19	4	587	88
A 60 4	**P71**	14	16.3	5	160	130	110	—	M8x16	4.5	587	88
A 60 4	**P80**	19	21.8	6	200	165	130	—	M10x12	4	606.5	90
A 60 4	**P90**	24	27.3	8	200	165	130	—	M10x12	4	606.5	90
A 60 4	**P100**	28	31.3	8	250	215	180	—	M12x16	4.5	616.5	94
A 60 4	**P112**	28	31.3	8	250	215	180	—	M12x16	4.5	616.5	94

A 60...HS

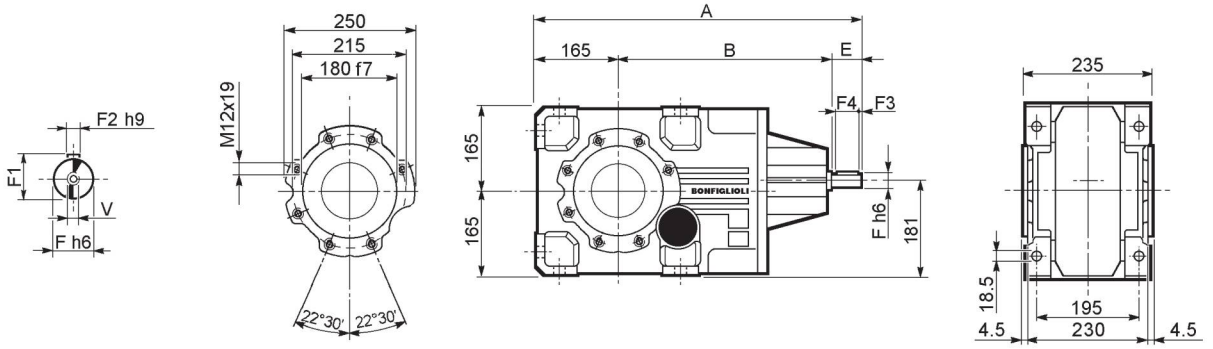

		A	B	E	F	F1	F2	F3	F4	V	Kg
A 60 2		633	408	60	28	31	8	5.0	50	M10x22	106
A 60 3	**HS**	633	408	60	28	31	8	5.0	50	M10x22	106
A 60 4		676	461	50	24	27	8	2.5	45	M8x19	112

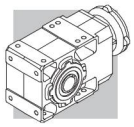

A 60...SK / SC

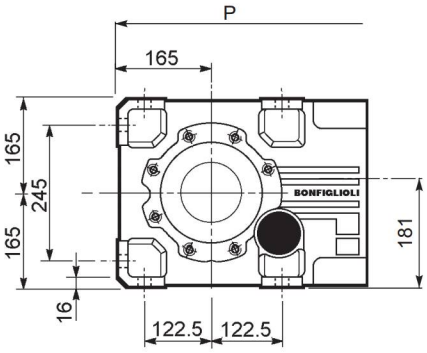

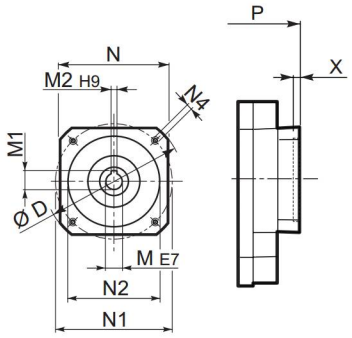

SK...

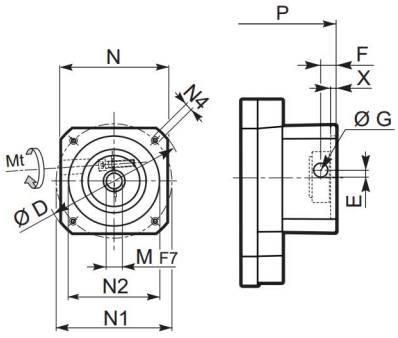

SC...

		D	M	M1	M2	N	N1	N2	N4	X	P 2/3x	P 4x	Kg
A 60 4	**SK80B**	120	14	16.3	5	96	100	80	M6x12	4	—	606.5	89
A 60 2/3/4	**SK80C**	120	19	21.8	6	96	100	80	M6x12	4	536	606.5	93/93/92
A 60 2/3/4	**SK95A**	130	14	16.3	5	102	115	95	M8x12	4	536	606.5	93/93/92
A 60 2/3/4	**SK95B**	130	19	21.8	6	102	115	95	M8x12	4	536	606.5	93/93/92
A 60 2/3/4	**SK95C**	130	24	27.3	8	102	115	95	M8x12	4	536	606.5	93/93/92
A 60 2/3/4	**SK110A**	140	19	21.8	6	120	130	110	M8x12	5	536	606.5	93/93/92
A 60 2/3/4	**SK110B**	140	24	27.3	8	120	130	110	M8x12	5	536	606.5	93/93/92
A 60 2/3/4	**SK130A**	188	24	27.3	8	142	165	130	M10x20	5	536	606.5	97/97/103
A 60 2/3	**SK130B**	189	32	35.3	10	160	165	130	M10x20	5	582.5	—	102/102
A 60 2/3	**SK180A**	240	32	35.3	10	192	215	180	M12x19	5	582.5	—	102/102
A 60 2/3	**SK180B**	240	38	41.3	10	192	215	180	M12x19	5	582.5	—	102/102

		Mt	D	E	F	G	M	N	N1	N2	N4	X	P 2/3x	P 3x	Kg
A 60 4	**SC80B**	M6 15 Nm	120	15.5	14.5	17.75	14	96	100	80	M6x12	4	—	630	90
A 60 2/3/4	**SC80C**	M6 15 Nm	120	15.5	14.5	17.75	19	96	100	80	M6x12	4	559.5	630	94/94/93
A 60 2/3/4	**SC95A**	M6 15 Nm	130	16.5	15	17.75	14	102	115	95	M8x16	4	559.5	630	94/94/93
A 60 2/3/4	**SC95B**	M6 15 Nm	130	16.5	15	17.75	19	102	115	95	M8x16	4	559.5	630	94/94/93
A 60 2/3/4	**SC95C**	M6 15 Nm	130	16.5	15	17.75	24	102	115	95	M8x16	4	559.5	630	94/94/93
A 60 2/3/4	**SC110A**	M6 15 Nm	140	16.5	16	17.75	19	120	130	110	M8x16	5	559.5	630	95/95/93
A 60 2/3/4	**SC110B**	M6 15 Nm	140	16.5	16	17.75	24	120	130	110	M8x16	5	559.5	630	95/95/93
A 60 2/3/4	**SC130A**	M6 15 Nm	188	19	16	17.75	24	142	165	130	M10x20	5	559.5	630	96/96/104
A 60 2/3	**SC130B**	M8 36 Nm	189	20	17	17.75	32	160	165	130	M10x20	5	605.5	—	105/105
A 60 2/3	**SC180A**	M8 36 Nm	240	20	17.5	17.75	32	192	215	180	M12x24	5	609.5	—	105/105
A 60 2/3	**SC180B**	M8 36 Nm	240	20	17.5	17.75	38	192	215	180	M12x24	5	609.5	—	105/105

A 60...F...

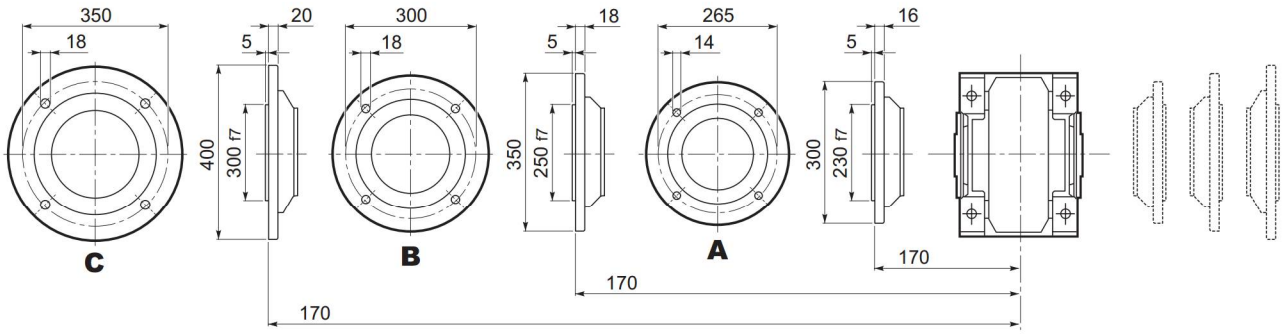

Bonfiglioli Riduttori

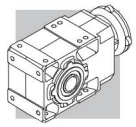

A 60

A 60...UR

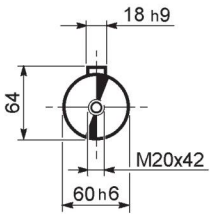

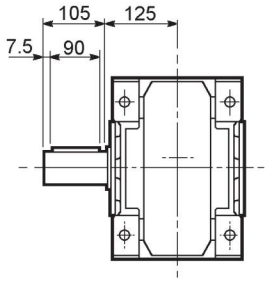

A 60...UD

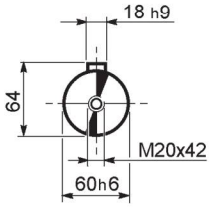

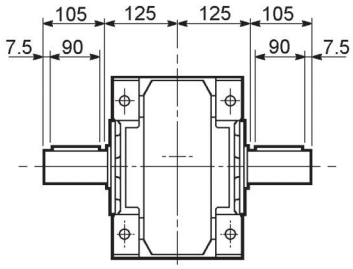

A 60...UH

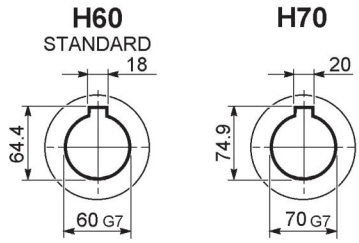

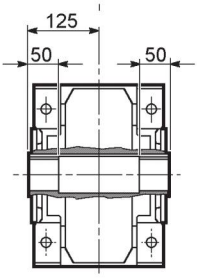

A 60...US

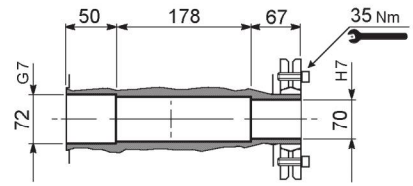

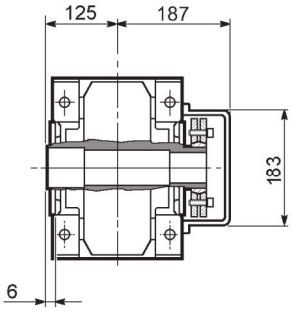

A 60...QF

	Ø
QF60	60
QF65	65
QF70	70

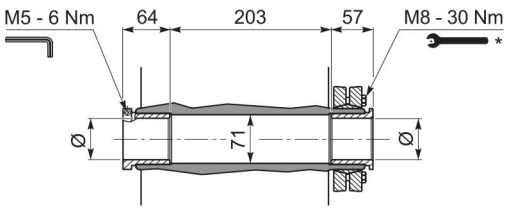

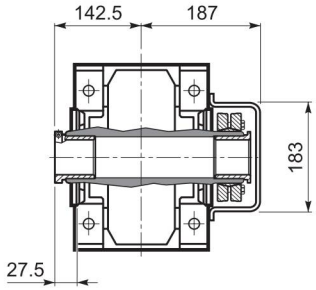

A 60...UV

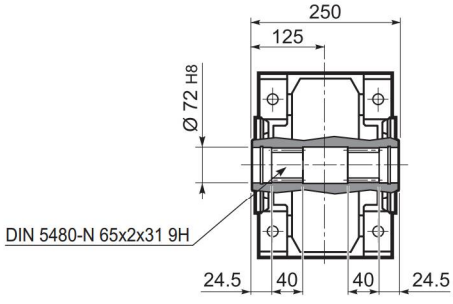

* Follow the MOUNTING INSTRUCTIONS supplied with the gearbox.

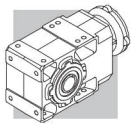

A 70...M

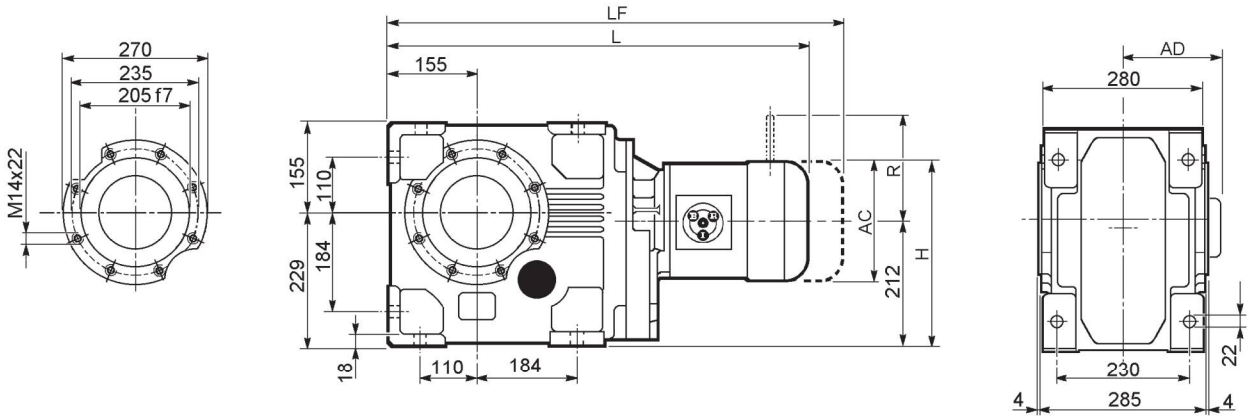

								M...FD M...FA		M...FD		M...FA	
			AC	H	L	AD	Kg	LF	Kg	R	AD	R	AD
A 70 3	**S2**	**M2S**	156	290	688.5	119	152	758.5	156	129	146	134	119
A 70 3	**S3**	**M3S**	195	309.5	731.5	142	157	827.5	164	160	158	160	142
A 70 3	**S3**	**M3L**	195	309.5	763.5	142	164	854.5	171	160	158	160	142
A 70 3	**S4**	**M4**	258	341	872.5	193	198	981.5	216	226	210	217	193
A 70 3	**S4**	**M4LC**	258	341	907.5	193	206	1006.5	224	226	210	217	193
A 70 3	**S5**	**M5S**	310	367	958	245	226	1098	256	266	245	247	245
A 70 3	**S5**	**M5L**	310	367	1002	245	242	1142	272	266	245	247	245
A 70 4	**S1**	**M1**	138	281	710.5	108	152	771.5	155	103	135	124	108
A 70 4	**S2**	**M2S**	156	290	739.5	119	156	809.5	160	129	146	134	119
A 70 4	**S3**	**M3S**	195	309.5	782.5	142	161	878.5	168	160	158	160	142
A 70 4	**S3**	**M3L**	195	309.5	814.5	142	168	905.5	175	160	158	160	142
A 70 4	**S4**	**M4**	258	341	922.5	193	202	1031.5	220	226	210	217	193
A 70 4	**S4**	**M4LC**	258	341	957.5	193	210	1056.5	228	226	210	217	193

A 70...P(IEC)

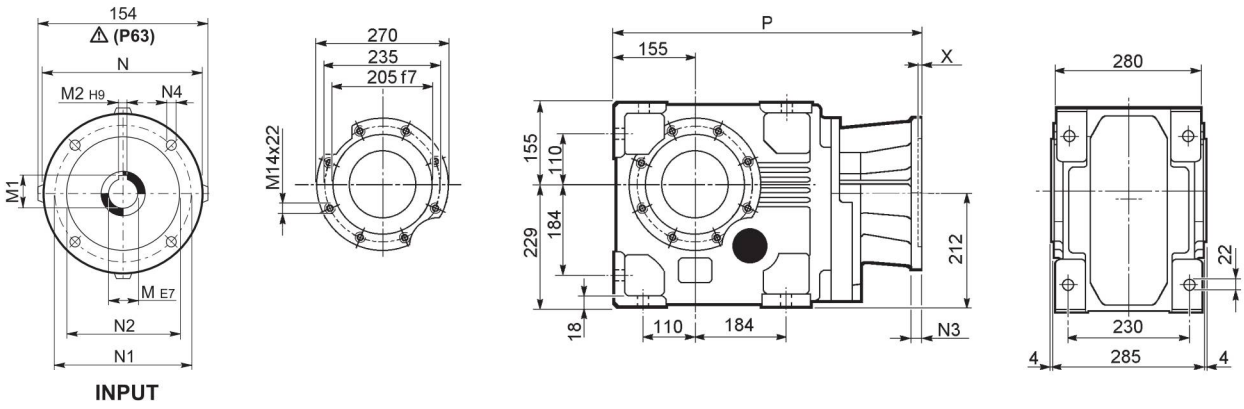

		M	M1	M2	N	N1	N2	N3	N4	X	P	Kg
A 70 3	**P80**	19	21.8	6	200	165	130	—	M10x12	4	524	144
A 70 3	**P90**	24	27.3	8	200	165	130	—	M10x12	4	524	144
A 70 3	**P100**	28	31.3	8	250	215	180	—	M12x16	4.5	534	146
A 70 3	**P112**	28	31.3	8	250	215	180	—	M12x16	4.5	534	146
A 70 3	**P132**	38	41.3	10	300	265	230	16	14	5	570.5	154
A 70 3	**P160**	42	45.3	12	350	300	250	23	18	6	626	169
A 70 3	**P180**	48	51.8	14	350	300	250	23	18	6	626	169
A 70 3	**P200**	55	59.3	16	400	350	300	—	M16x25	7	651	179
A 70 4	**P63**	11	12.8	4	140	115	95	—	M8x19	4	555.5	146
A 70 4	**P71**	14	16.3	5	160	130	110	—	M8x16	4.5	555.5	146
A 70 4	**P80**	19	21.8	6	200	165	130	—	M10x12	4	575	147
A 70 4	**P90**	24	27.3	8	200	165	130	—	M10x12	4	575	147
A 70 4	**P100**	28	31.3	8	250	215	180	—	M12x16	4.5	585	148
A 70 4	**P112**	28	31.3	8	250	215	180	—	M12x16	4.5	585	148
A 70 4	**P132**	38	41.3	10	300	265	230	16	14	5	618.5	157

A 70...HS

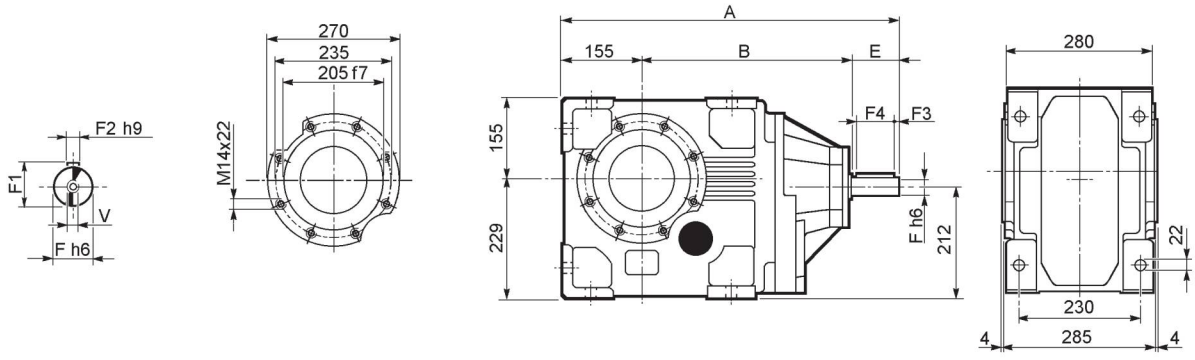

		A	B	E	F	F1	F2	F3	F4	V	Kg
A 70 3	**HS**	708.5	443.5	110	42	45	12	10	90	M12x28	165
A 70 4		644.5	439.5	50	24	27	8	2.5	45	M8x19	149

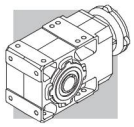

A 70

A 70...UR

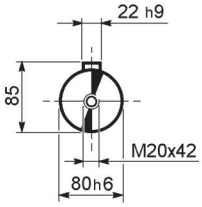

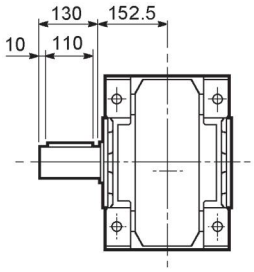

A 70...UD

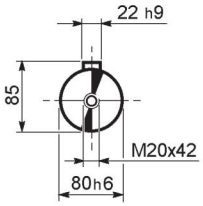

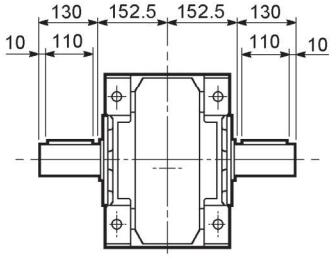

A 70...UH

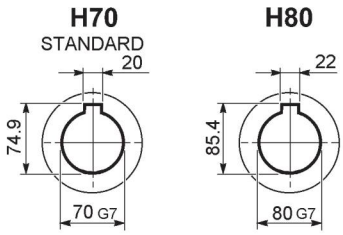

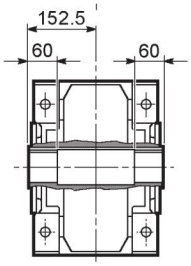

A 70...US

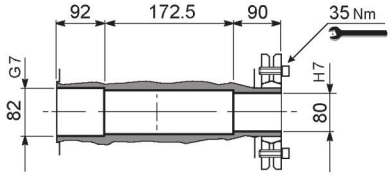

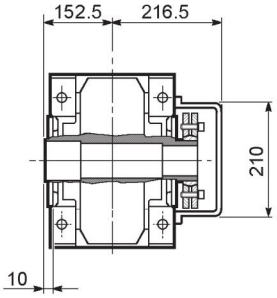

A 70...F...

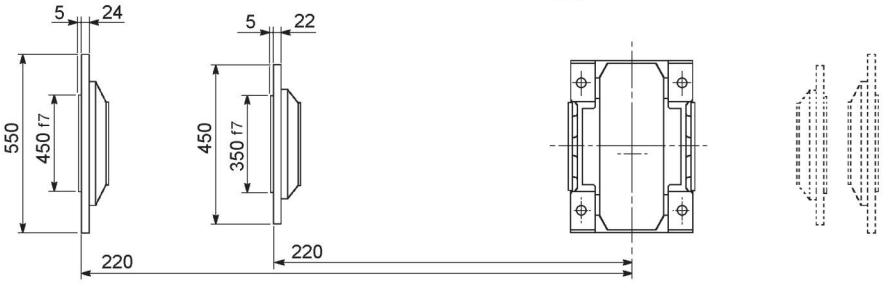

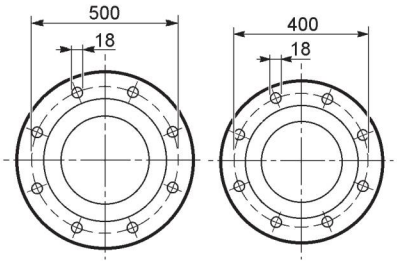

A 80...M

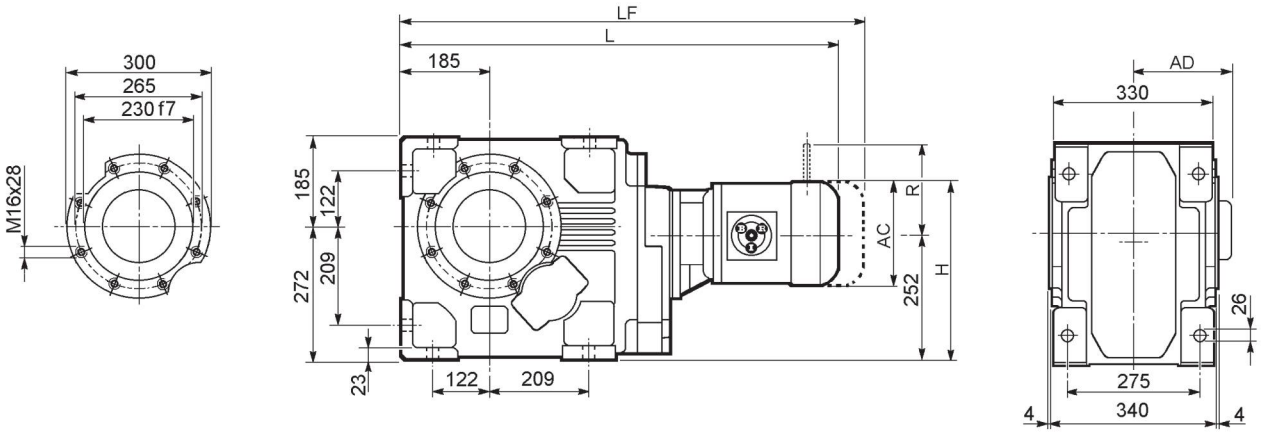

								M...FD M...FA		M...FD		M...FA	
			AC	H	L	AD	Kg	LF	Kg	R	AD	R	AD
A 80 3	**S3**	**M3S**	195	349.5	809.5	142	256	905.5	264	160	158	160	142
A 80 3	**S3**	**M3L**	195	349.5	841.5	142	264	932.5	271	160	158	160	142
A 80 3	**S4**	**M4**	258	381	949.5	193	298	1058.5	316	226	210	217	193
A 80 3	**S4**	**M4LC**	258	381	984.5	193	306	1083.5	324	226	210	217	193
A 80 3	**S5**	**M5S**	310	407	1036	245	326	1176	356	266	245	247	245
A 80 3	**S5**	**M5L**	310	407	1080	245	342	1220	372	266	245	247	245
A 80 4	**S1**	**M1**	138	321	800.5	108	246	861.5	249	103	135	124	108
A 80 4	**S2**	**M2S**	156	330	829.5	119	250	899.5	254	129	146	134	119
A 80 4	**S3**	**M3S**	195	349.5	872.5	142	255	968.5	262	160	158	160	142
A 80 4	**S3**	**M3L**	195	349.5	904.5	142	262	995.5	269	160	158	160	142
A 80 4	**S4**	**M4**	258	381	1012.5	193	296	1121.5	314	226	210	217	193
A 80 4	**S4**	**M4LC**	258	381	1047.5	193	304	1146.5	322	226	210	217	193

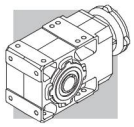

A 80...P(IEC)

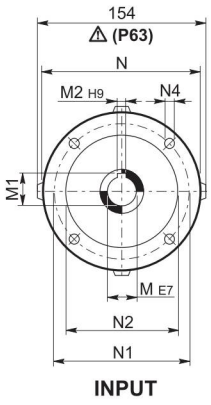

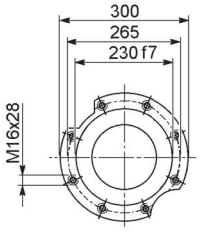

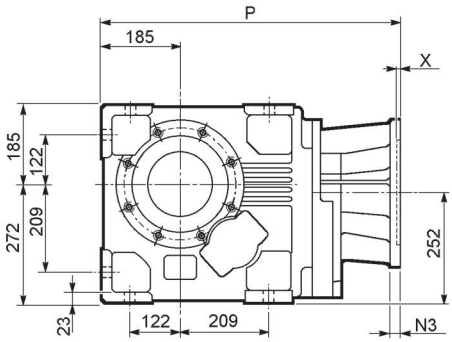

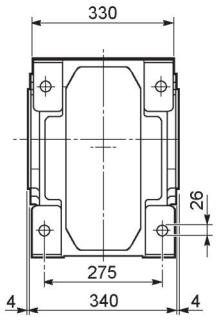

		M	M1	M2	N	N1	N2	N3	N4	X	P	Kg
A 80 3	**P80**	19	21.8	6	200	165	130	—	M10x12	4	602	243
A 80 3	**P90**	24	27.3	8	200	165	130	—	M10x12	4	602	243
A 80 3	**P100**	28	31.3	8	250	215	180	—	M12x16	4.5	612	245
A 80 3	**P112**	28	31.3	8	250	215	180	—	M12x16	4.5	612	245
A 80 3	**P132**	38	41.3	10	300	265	230	16	14	5	648.5	253
A 80 3	**P160**	42	45.3	12	350	300	250	23	18	6	704	268
A 80 3	**P180**	48	51.8	14	350	300	250	23	18	6	704	268
A 80 3	**P200**	55	59.3	16	400	350	300	—	M16x25	7	729	279
A 80 3	**P225**	60	64.4	18	450	400	350	25	18	6	774.5	298
A 80 4	**P63**	11	12.8	4	140	115	95	—	M8x19	4	645.5	248
A 80 4	**P71**	14	16.3	5	160	130	110	—	M8x16	4.5	645.5	248
A 80 4	**P80**	19	21.8	6	200	165	130	—	M10x12	4	665	249
A 80 4	**P90**	24	27.3	8	200	165	130	—	M10x12	4	665	249
A 80 4	**P100**	28	31.3	8	250	215	180	—	M12x16	4.5	675	250
A 80 4	**P112**	28	31.3	8	250	215	180	—	M12x16	4.5	675	250
A 80 4	**P132**	38	41.3	10	300	265	230	16	M12x16	5	711.5	259

A 80...HS

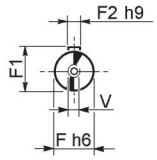

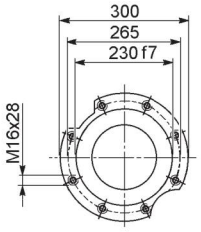

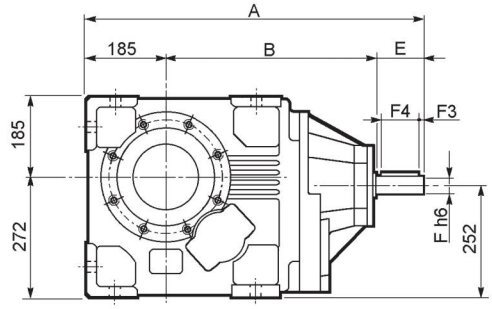

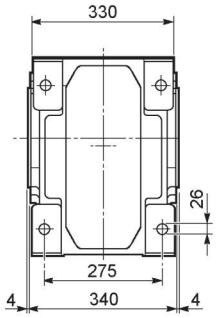

		A	B	E	F	F1	F2	F3	F4	V	Kg
A 80 3	**HS**	786.5	491.5	110	42	45	12	10	90	M12x28	265
A 80 4		735	499	50	24	27	8	2.5	45	M8x19	250

Bonfiglioli Riduttori

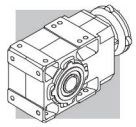

A 80

A 80...UR

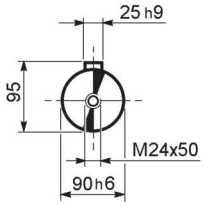

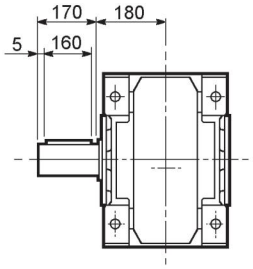

A 80...UD

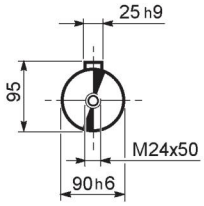

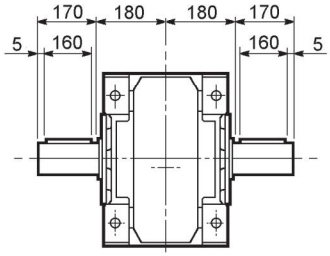

A 80...UH

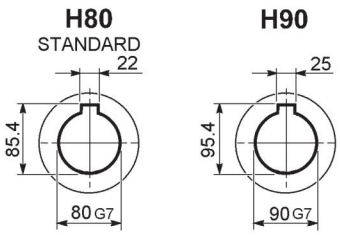

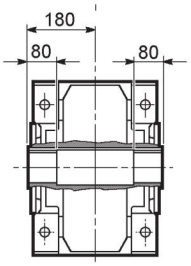

A 80...US

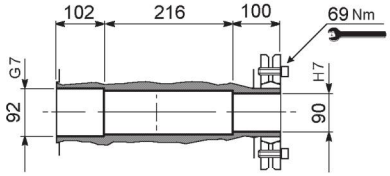

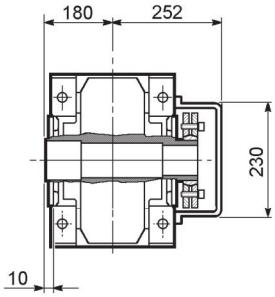

A 80...F...

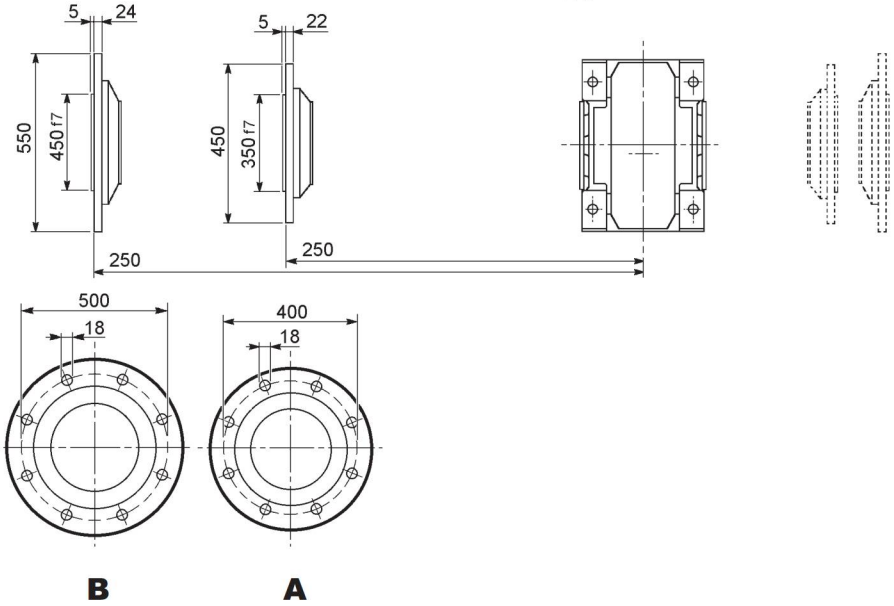

A 90...M

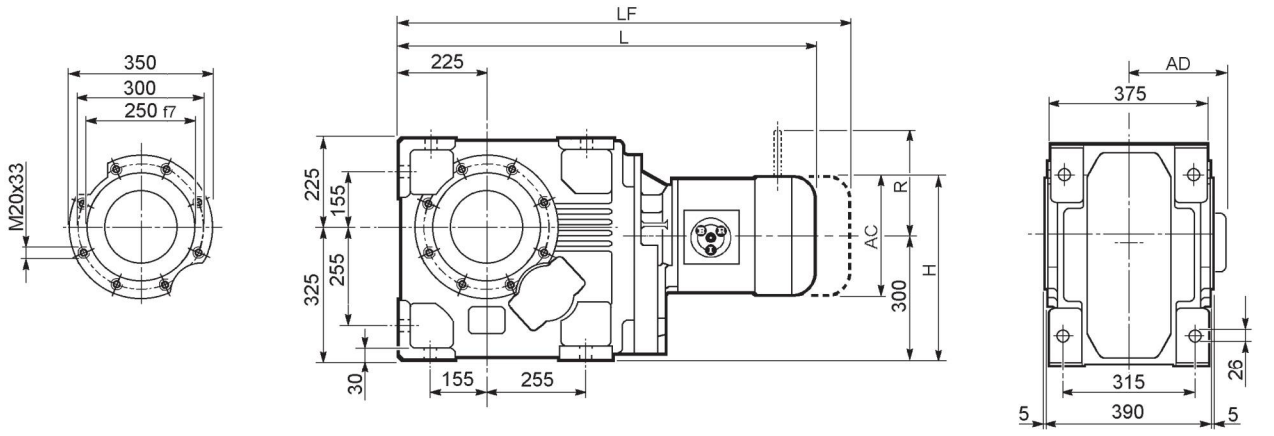

								M...FD M...FA		M...FD		M...FA	
			AC	H	L	AD	Kg	LF	Kg	R	AD	R	AD
A 90 3	**S3**	**M3S**	195	397.5	930.5	142	413	1026.5	420	160	158	160	142
A 90 3	**S3**	**M3L**	195	397.5	962.5	142	420	1053.5	427	160	158	160	142
A 90 3	**S4**	**M4**	258	429	1070.5	193	454	1179.5	472	226	210	217	193
A 90 3	**S4**	**M4LC**	258	429	1105.5	193	462	1204.5	480	226	210	217	193
A 90 3	**S5**	**M5S**	310	455	1157	245	482	1297	512	266	245	247	245
A 90 3	**S5**	**M5L**	310	455	1201	245	498	1341	528	266	245	247	245
A 90 4	**S1**	**M1**	138	369	941.5	108	412	1002.5	249	103	135	124	108
A 90 4	**S2**	**M2S**	156	378	970.5	119	422	1040.5	426	129	146	134	119
A 90 4	**S3**	**M3S**	195	397.5	1013.5	142	427	1109.5	434	160	158	160	142
A 90 4	**S3**	**M3L**	195	397.5	1045.5	142	434	1136.5	441	160	158	160	142
A 90 4	**S4**	**M4**	258	429	1153.5	193	468	1262.5	486	226	210	217	193
A 90 4	**S4**	**M4LC**	258	429	1188.5	193	476	1287.5	494	226	210	217	193

A 90...P(IEC)

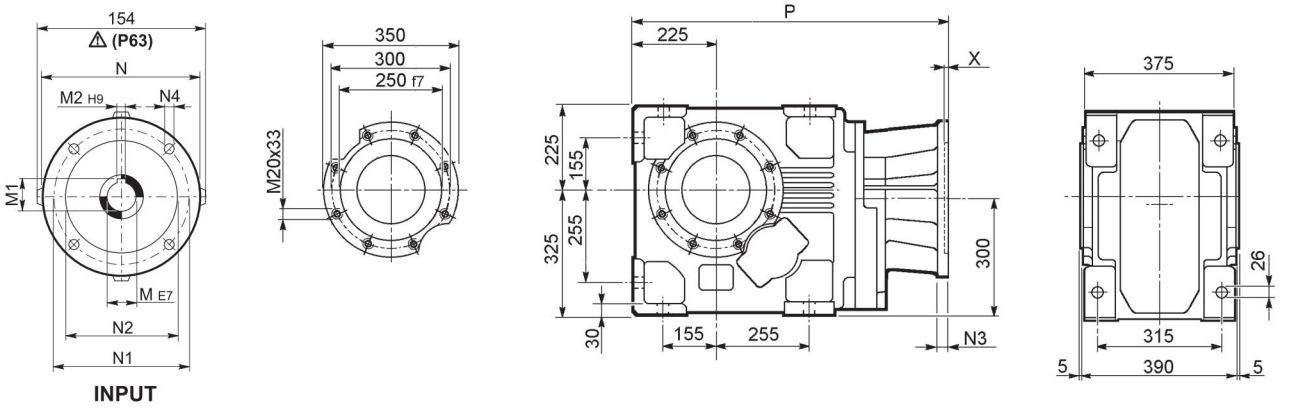

		M	M1	M2	N	N1	N2	N3	N4	X	P	Kg
A 90 3	**P80**	19	21.8	6	200	165	130	—	M10x12	4	723	400
A 90 3	**P90**	24	27.3	8	200	165	130	—	M10x12	4	723	400
A 90 3	**P100**	28	31.3	8	250	215	180	—	M12x16	4.5	733	401
A 90 3	**P112**	28	31.3	8	250	215	180	—	M12x16	4.5	733	401
A 90 3	**P132**	38	41.3	10	300	265	230	16	14	5	769.5	409
A 90 3	**P160**	42	45.3	12	350	300	250	23	18	6	825	428
A 90 3	**P180**	48	51.8	14	350	300	250	23	18	6	825	429
A 90 3	**P200**	55	59.3	16	400	350	300	—	M16x25	7	850	436
A 90 3	**P225**	60	64.4	18	450	400	350	30	18	6	895.5	472
A 90 3	**P250**	65	69.4	18	550	500	450	30	18	6	925.5	475
A 90 4	**P63**	11	12.8	4	140	115	95	—	M8x19	4	786.5	411
A 90 4	**P71**	14	16.3	5	160	130	110	—	M8x16	4.5	786.5	412
A 90 4	**P80**	19	21.8	6	200	165	130	—	M10x12	4	806	413
A 90 4	**P90**	24	27.3	8	200	165	130	—	M10x12	4	806	413
A 90 4	**P100**	28	31.3	8	250	215	180	—	M12x16	4.5	816	415
A 90 4	**P112**	28	31.3	8	250	215	180	—	M12x16	4.5	816	415
A 90 4	**P132**	38	41.3	10	300	265	230	16	14	5	852.5	423
A 90 4	**P160**	42	45.3	12	350	300	250	23	18	5.5	903	434
A 90 4	**P180**	48	51.8	14	350	300	250	23	18	5.5	903	434

A 90...HS

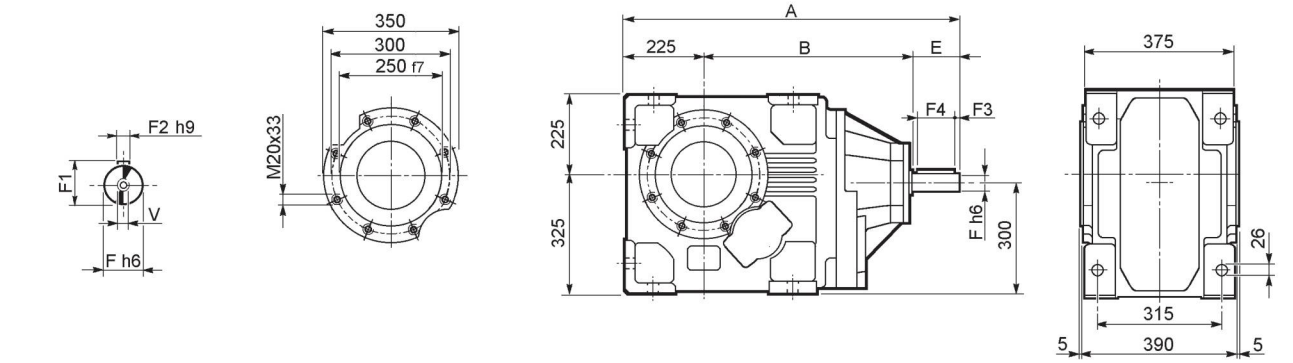

		A	B	E	F	F1	F2	F3	F4	V	Kg
A 90 3	**HS**	1009	644	140	60	64	18	10	120	M16x36	465
A 90 4		875.5	600.5	50	24	27	8	2.5	45	M8x19	415

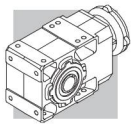

A 90

A 90...UR

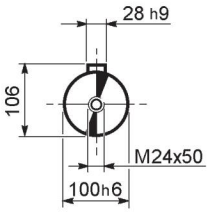

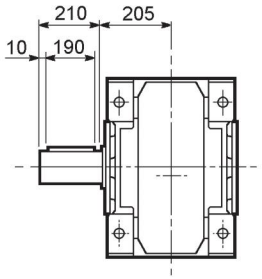

A 90...UD

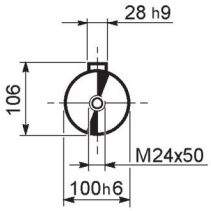

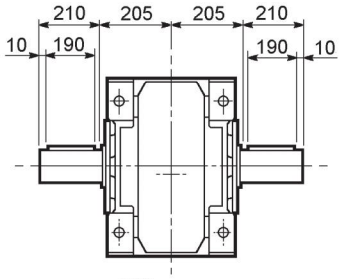

A 90...UH

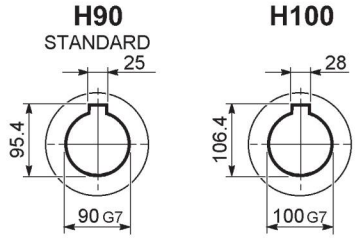

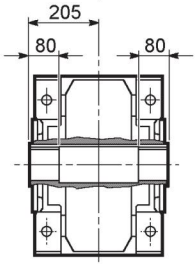

A 90...US

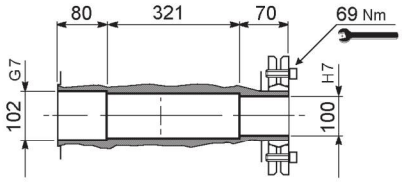

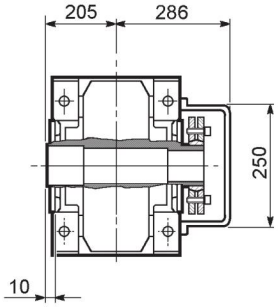

A 90...F...

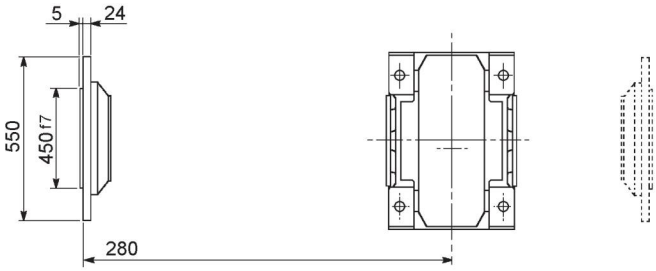

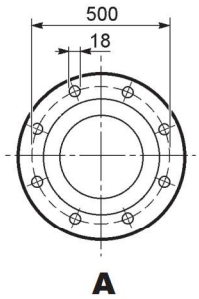

A

45 ACCESSORIES

45.1 A05 plug-in solid output shaft

For gear unit A 05 a plug-in solid shaft is available as a mounting kit including shaft, snap ring, washer and parallel
keys in both the single **(A 05 single o/p shaft**) and the double extension (**A 05 double o/p shaft**) configuration.

Shaft can be configured as either left- or right-hand and does not require any particular tooling.

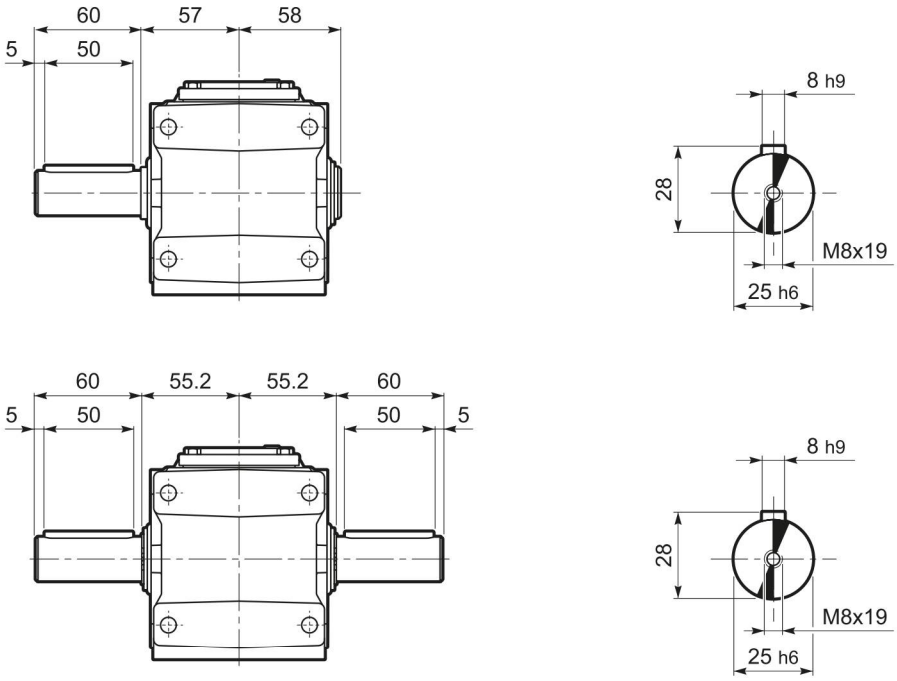

45.2 Safety cover

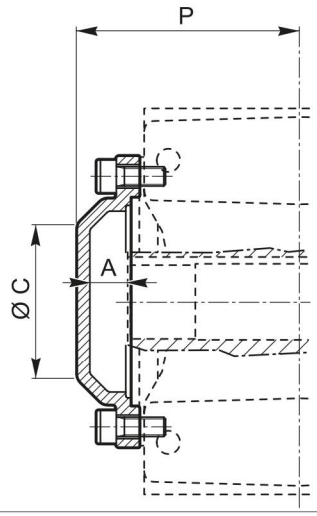

	A	Ø C	P
A 05	17.5	36	73.5
A 10	20.5	60	84.5
A 20	20	75	94
A 30	20	75	104
A 35	19.5	80	114
A 41	21	110	120
A 50	26	100	148.5
A 55	27	100	149
A 60	25	100	158
A 70	33.5	120	193.5
A 80	38	140	228
A 90	43	152	258

45.3 Torque arm

Torque arm comes complete with fastening bolts.

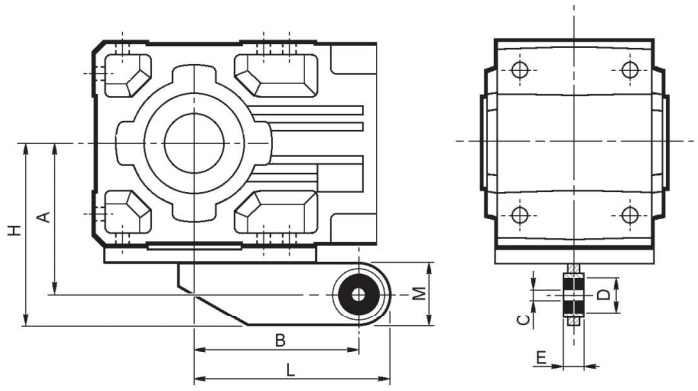

	A	B	C	D	E	H	L	M
A 05	90.5	80	10	30	20	115.5	105	50
A 10	108	118	10	30	20	138	148	60
A 20	118	137	10	30	20	148	167	60
A 30	135	150	20	40	25	170	185	70
A 35	145	165	20	40	25	180	200	70
A 41	157	200	20	40	25	192	235	70
A 50	200	250	32	56	40	245	295	90
A 55	200	250	32	56	40	245	295	90
A 60	225	300	32	56	40	270	345	90

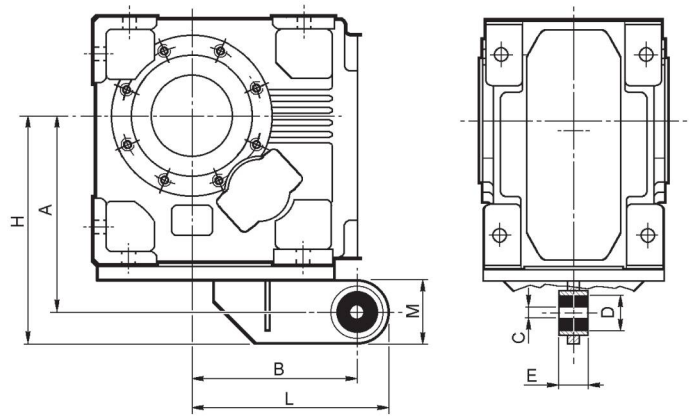

	A	B	C	D	E	H	L	M
A 70	289	250	32	56	40	334	295	90
A 80	357	300	42	78	60	422	365	130
A 90	410	350	42	78	60	475	415	130

46 CUSTOMER' SHAFT

Make the driven shaft to be coupled to the gear unit's output shaft from a good quality steel, respecting the dimensions given in the table.

A device such as that illustrated below should also be installed to secure the shaft axially. Take care to verify and dimension the various components to suit the needs of the application.

UH_

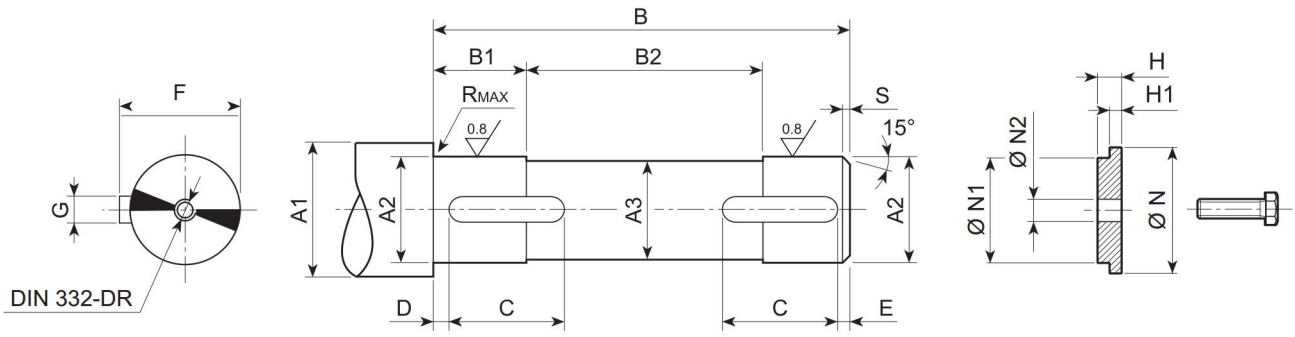

	A1	A2	A3	B	B1	B2	C	D	E	F	G	R	S	UNI 6604	N	N1	N2	H	H1	UNI 5739
A05 UH25	≥ 30	25 h7	24	102	21	62	20	2	2	28	8 h9	0.5	1.5	8x7x20 A	35	25 d9	9	7	5.5	M8x25
A10 UH30	≥ 35	30 h7	29	118	16	87	20	2	2	33	8 h9	0.5	1.5	8x7x20 A	35	30 d9	11	8.5	7	M10x30
A10 UH25	≥ 30	25 h7	24	118	16	87	20	2	2	28	8 h9	0.5	1.5	8x7x20 A	30÷35	25 d9	9	7	5.5	M8x25
A20 UH35	≥ 42	35 h7	34	138	20	98	20	2	2	38	10 h9	0.5	1.5	10x8x20 A	42	35 d9	11	8.5	7	M10x30
A20 UH30	≥ 35	30 h7	29	138	20	98	25	2	2	33	8 h9	0.5	1.5	8x7x25 A	35÷42	30 d9	11	8.5	7	M10x30
A30 UH40	≥ 47	40 h7	39	158	23	112	30	2	2	43	12 h9	0.5	1.5	12x8x30 A	47	40 d9	14	8.5	7	M12x35
A30 UH35	≥ 42	35 h7	34	158	23	112	30	2	2	38	10 h9	0.5	1.5	10x8x30 A	42÷47	35 d9	11	8.5	7	M10x30
A35 UH40	≥ 47	40 h7	39	175	33	109	40	2	2	43	12 h9	1	1.5	12x8x40 A	47	40 d9	14	8.5	7	M12x35
A35 UH35	≥ 42	35 h7	34	175	33	109	40	2	2	38	10 h9	1	1.5	10x8x40 A	42÷47	35 d9	11	8.5	7	M10x30
A41 UH45	≥ 52	45 h7	44	184	28	128	45	2.5	2.5	48.5	14 h9	1	2	14x9x45 A	52	45 d9	14	8.5	7	M12x35
A41 UH40	≥ 47	40 h7	39	184	28	128	50	2.5	2.5	43	12 h9	1	2	12x8x50 A	47÷52	40 d9	14	8.5	7	M12x35
A50 UH55	≥ 63	55 h7	54	226	37.5	151	55	2.5	2.5	59	16 h9	1	2	16x10x55 A	63	55 d9	22	10	8	M20x50
A50 UH50	≥ 57	50 h7	49	226	37.5	151	65	2.5	2.5	53.5	14 h9	1	2	14x9x65 A	57÷63	50 d9	18	10	8	M16x45
A55 UH60	≥ 70	60 h7	59	226	37.5	151	65	2.5	2.5	64	18 h9	2	2	18x11x65 A	70	60 d9	22	10	8	M20x50
A55 UH50	≥ 60	50 h7	49	226	37.5	151	75	2.5	2.5	53.5	14 h9	2	2	14x9x75 A	60÷70	50 d9	18	10	8	M16x45
A60 UH70	≥ 78	70 h7	69	248	48	152	70	2.5	2.5	74.5	20 h9	2.5	2	20x12x70 A	78	70 d9	22	10	8.5	M20x50
A60 UH60	≥ 68	60 h7	59	248	48	152	80	2.5	2.5	64	18 h9	2.5	2	18x11x80 A	68÷78	60 d9	22	10	8.5	M20x50
A70 UH80	v89	80 h7	79	303	58	187	90	3	3	85	22 h9	2.5	2.5	22x14x90 A	89	80 d9	22	10	8.5	M20x50
A70 UH70	≥ 78	70 h7	69	303	58	187	110	3	3	74.5	20 h9	2.5	2.5	20x12x110 A	78÷89	70 d9	22	10	8.5	M20x50
A80 UH90	≥ 99	90 h7	89	358	78	202	120	3	3	95	25 h9	2.5	2.5	25x14x120 A	99	90 d9	26	22	20.5	M24x70
A80 UH80	≥ 89	80 h7	79	358	78	202	130	3	3	85	22 h9	2.5	2.5	22x14x130 A	89÷99	80 d9	22	10	8.5	M20x50
A90 UH100	≥ 111	100 h7	99	408	78	252	160	3	3	106	28 h9	2.5	2.5	28x16x160 A	111	100 d9	26	22	20.5	M24x70
A90 UH90	≥ 99	90 h7	89	408	78	252	190	3	3	95	25 h9	2.5	2.5	25x14x190 A	99÷111	90 d9	26	22	20.5	M24x70

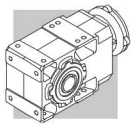

US

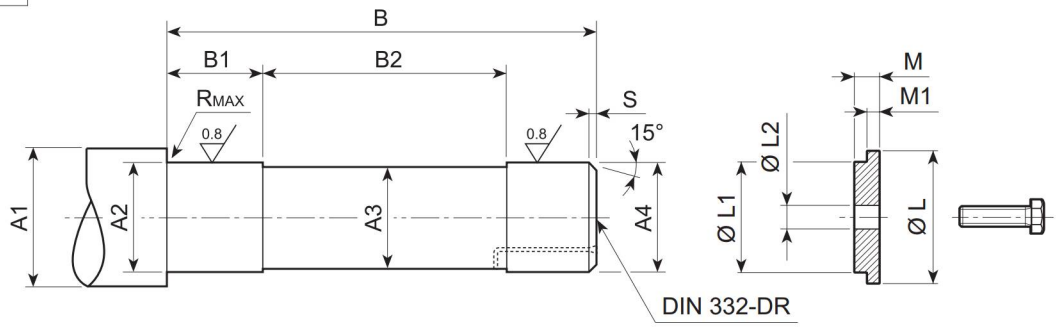

	A1	A2	A3	A4	B	B1	B2	R	S	L	L1	L2	M	M1	UNI 5739
A 05	≥ 35	27 h7	24	25 h6	129.5	32	63.5	0.5	1.5	29.5	25 d9	11	8.5	7	M10x30
A 10	≥ 42	32 h7	29	30 h6	147.5	34	77.5	0.5	1.5	35.5	30 d9	11	8.5	7	M10x30
A 20	≥ 48	37 h7	34	35 h6	170	40	89	0.5	1.5	43	35 d9	14	8.5	7	M12x35
A 30	≥ 54	42 h7	39	40 h6	191.5	48	95.5	0.5	1.5	49	40 d9	18	10	8.5	M16x45
A 35	≥ 54	42 h7	39	40 h6	208.5	48	112.5	0.5	1.5	49	40 d9	18	10	8.5	M16x45
A 41	≥ 60	47 h7	44	45 h6	222	53	117	1	2	54	45 d9	18	10	8.5	M16x45
A 50	≥ 72	57 h7	54	55 g6	264	46	156	1	2	72	55 d9	22	10	8.5	M20x50
A 55	≥ 72	62 h7	59	60 g6	266	46	158	2.5	2	72	60 d9	22	10	8.5	M20x50
A 60	≥ 90	72 h7	69	70 g6	293	48	178	2.5	2.5	85	70 d9	22	10	8.5	M20x50
A 70	≥ 104	82 h7	79	80 g6	352.5	90	172.5	2.5	2.5	95	80 d9	22	10	8.5	M20x50
A 80	≥ 114	92 h7	89	90 g6	416	100	216	2.5	2.5	105	90 d9	26	22	20.5	M24x70
A 90	≥ 126	102 h7	99	100 g6	469	78	321	2.5	2.5	120	100 d9	26	22	20.5	M24x70

UV

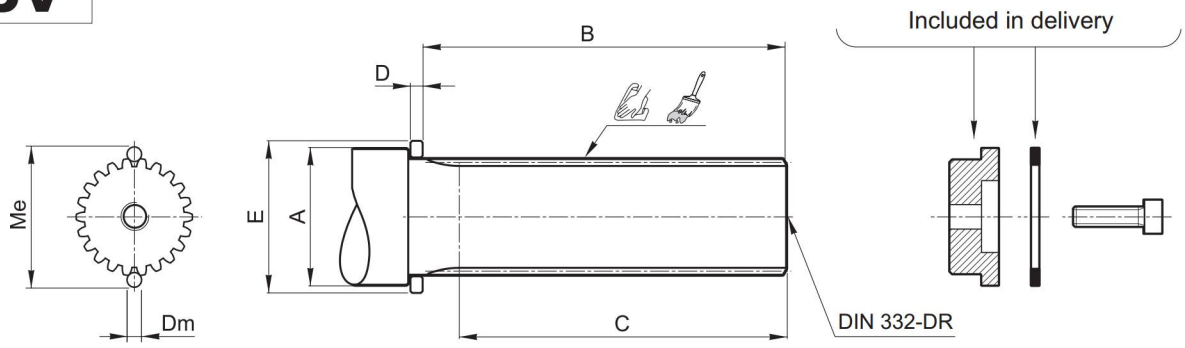

	DIN 5480	Me	Dm	A	B	C	D	E	ISO 4762
A 20	30x1.25x30x22	33.04 +0/-0.04	2.75	≥ 40	111.5	≥ 95	7	45	M10x35
A 30	35x2x30x16	38.93 +0/-0.04	4	≥ 45	130.5	≥ 112	7	50	M12x40
A 35	35x2x30x16	38.93 +0/-0.04	4	≥ 45	147.5	≥ 129	7	50	M12x40
A 41	45x2x30x21	48.86 +0/-0.04	4	≥ 55	155.5	≥ 136	7	60	M16x45
A 50	50x2x30x24	54.14 +0/-0.05	4	≥ 60	196	≥ 175	7	65	M16x45
A 55	50x2x30x24	54.14 +0/-0.05	4	≥ 60	196	≥ 175	7	65	M16x45
A 60	65x2x30x31	68.97 +0 /-0.05	4	≥ 75	213.5	≥ 191	7	80	M20x55

QF

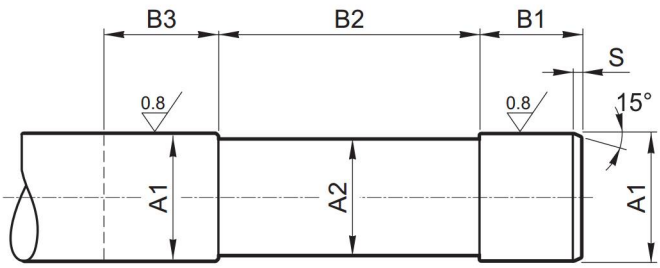

		A1	A2	B1	B2	B3	S
A 10	**QF25**	25 h6	24	41	95	≥ 50	1.5
	QF30	30 h6	29				
A 20	**QF25**	25 h6	24	41	115	≥ 50	1.5
	QF30	30 h6	29				
A 30	**QF35**	35 h6	34	45	130	≥ 54	1.5
	QF40	40 h6	39				
A 35	**QF35**	35 h6	34	45	146.5	≥ 54	1.5
	QF40	40 h6	39				
A 41	**QF40**	40 h6	39	47	151.5	≥ 56	2
	QF45	45 h6	44				
A 50	**QF50**	50 h6	49	48	197	≥ 57	2
	QF55	55 h6	54				
A 55	**QF55**	55 h6	54	50	190	≥ 59	2
	QF60	60 h6	59				
A 60	**QF60**	60 h6	59	57	203	≥ 66	2.5
	QF65	65 h6	64				
	QF70	70 h6	69				

47 INTRODUCTION TO THE ATEX DIRECTIVES

47.1 Explosive atmosphere

An **explosive atmosphere** for the purposes of Directive 94/9/EC is defined as a mixture:

a. of **flammable substances**, in the form of gases, vapours, mists or dusts;
b. with **air**;
c. under atmospheric conditions;
d. in which, after ignition, the combustion spreads to the entire unburned mixture (it has to be noted that sometimes, mainly with dust, not always the whole quantity of the combustible material is consumed by the combustion).

An atmosphere, which could become explosive due to local and/or operational conditions is called a **potentially explosive atmosphere**.
It is only in this kind of potentially explosive atmosphere which products falling under the Directive 94/9/EC are designed for.

47.2 European harmonised atex standards

The European Union has issued two harmonisation guidelines in the area of health and safety. These directives are known as “ATEX 95” and “ATEX 137”.

Directive “ATEX 95” (EU/94/9/EC) stipulates the minimum safety requirements for products intended for use in explosion risk areas within the member countries of the European Union. The directive also assigns such equipment to **categories,** which are defined by the directive itself.

Directive “ATEX 137” (EU/99/ 92/EC) defines the minimum health and safety requirements for the workplace, for working conditions and for the handling of products and materials in explosion risk areas. The directive also divides the workplace into **zones** and defines the criteria for the application of product **categories** in said zones. The following table describes the **zones** into which the user of a plant, in which an explosive atmosphere may occur,is required to divide the equipment application areas.

(C 1)

Zones		Formation frequency of a potentially xplosive atmosphere	Type of danger
Gaseous atmosphere G	Dusty atmosphere D		
0	20	Present continuously or for long periods	Permanent
1	21	Likely to occur in normal operation occasionally	Potential
2	22	Not likely to occur in normal operation but if it does occur will persist for short period only	Minimal

BONFIGLIOLI RIDUTTORI gear units selected in this catalogue are suitable for installation in zones 1, 21.

Gearbox can also be supplied for installation in zones 2, 22. Contact our Technical Service for further details.

As from 1 July 2003 the ATEX directives come into force throughout the entire European Union, and replace existing conflicting national and European laws on explosive atmospheres.
It should be emphasised that, for the first time, the directives also govern mechanical, hydraulic and pneumatic equipment, and not only electrical equipment as has been the case so far.
With regard to the Machinery Directive 2006/42/EC it should be noted that directive 94/9/EC is a set of extremely specific requirements dedicated to the dangers deriving from potentially explosive atmospheres, whereas the Machinery Directive contains only very general explosion safety requirements (Annex I).
Consequently, as regards protection against explosion in potentially explosive atmospheres, Directive 94/9/EC ("ATEX 95") takes precedence over the Machinery Directive.
The requirements of the Machinery Directive apply to all other risks regarding machinery.

47.3 Levels of protection for the various categories of equipment

The various categories of equipment must be able to operate in conformity witht he Manufacturer's operational specifications, at certain defined levels of protection.
The availability of BONFIGLIOLI RIDUTTORI products is highlighted in grey.

(C 2)

Protection level	Category		Type of protection	Operating conditions
	Group I	Group II		
Molto elevato	M1		Two independent means of protection or safety capable of operating even when two independent faults occur.	The equipment remains powered and operational even in the presence of an explosive atmosphere.
Molto elevato		**1**	Two independent means of protection or safety capable of operating even when two independent faults occur.	The equipment remains powered and operational in zones 0, 1, 2 (G) and/or zones 20, 21, 22 (D).
High	M2		Protection suitable for normal operation and heavy duty conditions.	Power to the equipment is shut off in the presence of a potentially explosive atmosphere.
High		**2**	Protection suitable for normal operation and frequent faults or equipment in which malfunction is normal.	The equipment remains powered and operational in zones 1, 2 (G) and/or zones 21, 22 (D).
Normal		**3**	Protection suitable for normal operation.	The equipment remains powered and operational in zones 2 (G) and/or zones 22 (D).

47.4 Definition of groups

Group I Applies to equipment intended for use underground in parts of mines and those parts of surface installations of such mines, liable to been dangered by fire damp and/or combustible dust.

Group II Applies to equipment intended for use in other places liable to been dangered by explosive atmospheres.

BONFIGLIOLI RIDUTTORI products may not therefore be installed in mines, classified in **Group I** and in **Group II**, category 1.

To summarise, the classification of equipment in to groups, categories and zones is illustrated in the table below, where by the availability of BONFIGLIOLI RIDUTTORI products is highlighted in grey.

(C 3)

Group	**I** Mines, firedamp		**II** Other potentially explosive areas (gas, dust)					
Category	M1	M2	1		2		3	
Atmosphere(1)			G	D	G	D	G	D
Zone			0	20	1	21	2	22
Type of protection gear unit					c, k	c, k		

(1) **G** = gas **D** = **dust**

This catalogue describes BONFIGLIOLI RIDUTTORI **gear units**, intended for use in potentially explosive atmospheres, with limitation to categorie 2.

The products described here in conform to the minimum safety requirements of European Directive 94/9/EC, which is part of the directives known as ATEX (ATmosphères EXplosibles).

47.5 Declaration of conformity

The Declaration of Conformity, is the document which attests to the conformity of the product to Directive 94/9/EC.
The validity of the Declaration is bound to observance of the instructions given in the User, Installation and Service Manual for safe use of the product throughout its service life.
This can be downloaded from www.bonfiglioli.com where the manual is available in PDF format in a number of languages.
The instructions regarding ambient conditions are of particular importance inasmuch as failure to observe them during operation of the product renders the certificate null and void. In case of doubt regarding the validity of the certificate of conformity, contact the BONFIGLIOLI RIDUTTORI technical department.

48 SELECTION

Some fundamental data are necessary to assist the correct selection of a gearbox or gear unit with IEC motor interface. The table below briefly sums up this information.
To simplify selection, a copy of this form, duly filled in, can be forwarded to our Technical Service which will select the most suitable drive unit for your application.
(C 4)

Bonfiglioli power, control and green solutions	TECHNICAL DATA REQUIRED FOR THE SELECTION OF GEARBOXS A SERIES	Nr:	
		Date:	
		Rev_	Date:

		A)	GENERAL DATA				
#	1		Company / Customer				
#	2		Contact				
#	3		Branch / Distributor				
#	4		Order quantity				
	5		Delivery time				
		B_1)	ELECTRIC MOTOR				
	6		Motor Type				
#	7	P_{n1}	Rated motor Power		[kW]		
#	8	P_{r1}	Motor power demand		[kW]		
	9	n_1	Input speed		[min^{-1}]		
	10		No. of Poles				
		C)	GEARBOX				
#	11		Gearbox configuration				
#	12	i	Gear ratio				
#	13	n_1	Input speed		[min^{-1}]		
#	14	M_{r2}	Output torque demand		[Nm]		
#	15	f_S	Service factor demand				
	16		Rotation of the output shaft [frontal view]:	CW	CCW		
#	17	L_{10H}	Bearings lifetime		[h]		
	18		Gears lifetime		[h]		
	19	SF_{min}	Safety for tooth root stress		standard reference (ISO preferred)		
	20	SH_{min}	Safety for flank pressure		standard reference (ISO preferred)		
		D)	ADDITIONAL LOADS				
	21	R_{c2}	Radial load on output shaft		[N]	Orientation [°]	
	22	x_2	Load application distance from shaft shoulder		[mm]		
	23	R_{c1}	Radial load on input shaft		[N]	Orientation [°]	
	24	x_1	Load application distance from shaft shoulder		[mm]		
	25	A_{n2}	Thrust load on output shaft (+ / -)		[N]	+ = push	
	26	A_{n1}	Thrust load on input shaft (+ / -)		[N]	- = pull	
		E)	APPLICATION				
#	27		Type of application				
	28		Duty cycle	Time phase	Gearbox output torque	Gearbox output speed	
				%	[Nm]	[min^{-1}]	
				,,,,	,,,,		
				,,,,	,,,,		
				,,,,	,,,,		
	29		Notes about Duty Cycle:				
	30		Rating according FEM class	T-	L-	M-	
	31		Degree of intermittence		[%]		
	32	T_{AMB}	Ambient temperature range		[°C]		
#	33		Altitude a.s.l.		[m]		
	34		Type of ambient	small indoor space	large indoor space	outdoor	
		F)	NOTES				
	35		Notes and additional Customer requirements:				

Mandatory for the selection

49 INSTALLATION, USE AND MAINTENANCE

All the instructions for installation, use and maintenance of the product are given in the unit's Manual. This can be downloaded from www.bonfiglioli.com where the manual is available in PDF format in a number of languages.
This document must be kept in a suitable place, in the vicinity of the installed gear unit, as a reference for all persons authorised to work with or on the product throughout its service life.

50 CONSTRUCTION OF ATEX-SPECIFIED EQUIPMENT

- Equipped with service plugs for periodic lubricant level checks.
- Equipped with vent caps with anti-intrusion valve.
- Factory-charged with lubricant (synthetic oil), depending on the mounting position specified in the order.
- Fluoro elastomer seal rings as standard.
- No plastic component parts..
- Nameplate indication of the product category and type of protection.
- Components operable at above the operating temperature.
- Temperature indicator supplied along with each unit.

(C 5)

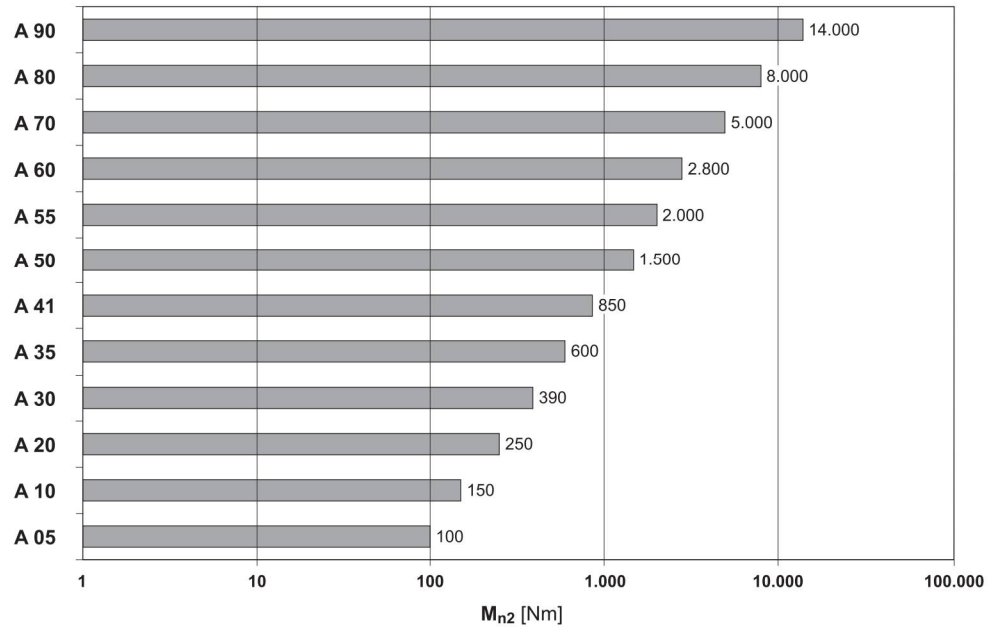



51 VERSIONS

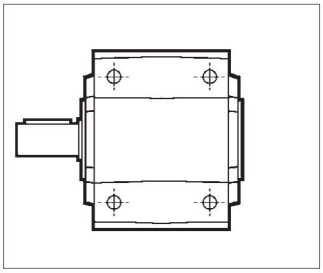

UR

Single extension output shaft

A 10 ... A 90

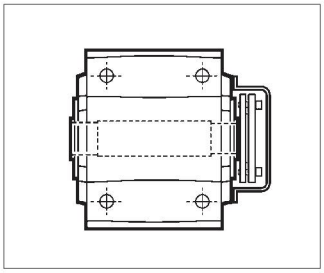

US

Hollow output shaft and shrink disc

A 05 ... A 90

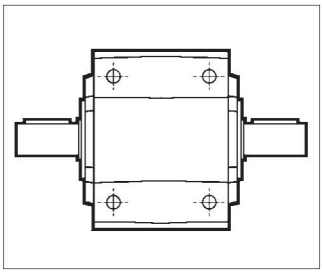

UD

Double extended output shaft

A 10 ... A 90

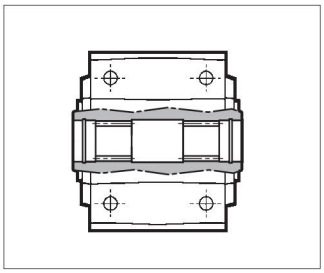

UV

Splined hollow shaft DIN 5480

A 20 ... A 60

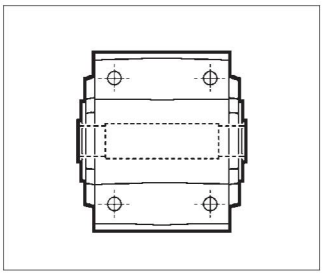

UH

Hollow output shaft and keyway

A 05 ... A 90

Basic versions with bolted flange

The sketches show the applicable flanges to the basic versions and their positions, designated with either ① or ② .

UR F1... **UR F2...**

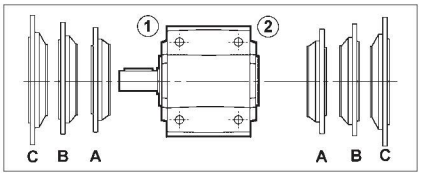

UD F1... **UD F2...**

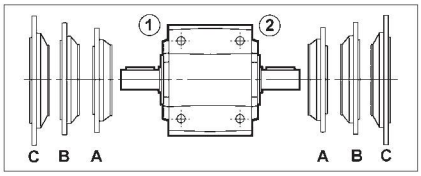

UH... F1... **UH... F2...**

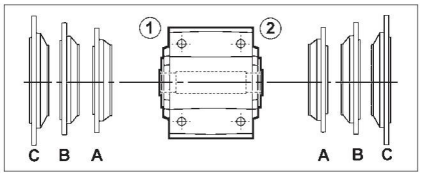

US F1... **US F2...**

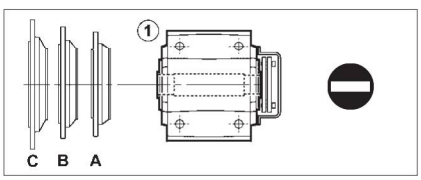

UV F1... **UV F2...**

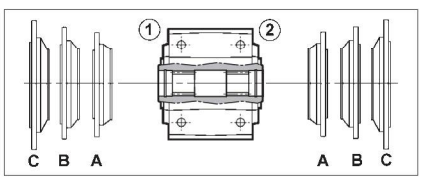

52 DESIGNATION

GEAR UNIT

A 50 3 UH50 F1A 99.5 S3 HS EX

OPTIONS

MOUNTING POSITION
B3 (Standard), **B6**, **B7**, **B8**, **VA**, **VB**

INPUT CONFIGURATION

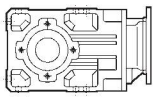

IEC_ **P63 ... P250**

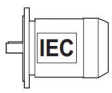

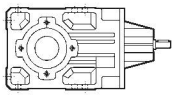

HS

GEAR RATIO

OUTPUT FLANGE SIZE AND POSITION
(specify only if requested)
F = Flanged version
1, **2** = Flange position
A, **B**, **C** = Flange size

VERSION

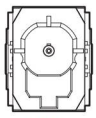

UH_

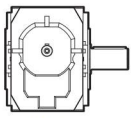

UR
(A 10...A 90)

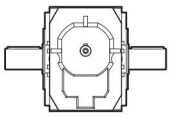

UD
(A 10...A 90)

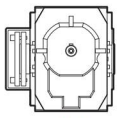

US
(A 05...A 90)

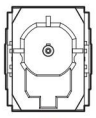

UV
(A 20...A 60)

A 05	A 10	A 20	A 30	A 35	A 41	A 50	A 55	A 60	A 70	A 80	A 90
UH25	**UH25**	**UH30**	**UH35**	**UH40**	**UH45**	**UH50**	**UH60**	**UH60**	**UH70**	**UH80**	**UH90**
—	UH30	UH35	UH40	UH35	UH40	UH55	UH50	UH70	UH80	UH90	UH100

REDUCTIONS
2 (A 05...A 60), **3** (A 20...A 90), **4** (A 50...A 90)

GEAR FRAME SIZE
05, **10**, **20**, **30**, **35**, **41**, **50**, **55**, **60**, **70**, **80**, **90**

TYPE: **A** = Helical bevel gear units

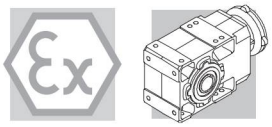

Gearbox options

EX

The gear unit can be installed in zones 1 and 2 (categories 2G and 2D).
The temperature class is T4 (max. 135 °C).

CERTIFICATES

AC - Certificate of compliance

The document certifies the compliance of the product with the purchase order and the construction in conformity with the applicable procedures of the Bonfiglioli Quality System.

CC - Inspection certificate

The document entails checking on order compliance, the visual inspection of external conditions and of mating dimensions. Checking on main functional parameters in unloaded conditions is also performed along with oil seal proofing, both in static and in running conditions. Units inspected are sampled within the shipping batch and marked individually.

53 LUBRICATION

The inner parts of Bonfiglioli gear units are oil-bath and splash lubricated.
The ATEX version gear unit (with some exceptions see Table below) are factory-charged with "long-life" lubricant SHELL OMALA S4 WE 320 in the quantity suitable for the mounting position specified in the order.
Before start-up, always check the oil level or fill the gearbox as instructed in its installation, operation and maintenance manual. (These manuals are available in a number of languages and can be down-loaded in pdf format from the website www.bonfiglioli.com.)

(C 6)

A 05	A 10	A 20	A 30	A 35	A 41	A 50	A 55 [1]	A 60 2 [2]	A 60 3 [1]	A 60 4 [1]	A 70 [1]	A 80 [1]	A 90 [1]

Gearbox pre-filled with a synthetic “for life” lubricant

Gearbox pre-filled with a synthetic lubricant

(1) Without lubricant for mounting positions B6 and B7
(2) Without lubricant for mounting positions B6, B7 and VB

Gearboxes are fitted with sealed filler plugs for transport purposes. Depending on version, they may be supplied with a vented plug which the user must fit before putting the gearbox into service.
Refer to the installation, operation and maintenance manual to replace the filler plug correctly. (These manuals are available in a number of languages and can be downloaded in pdf format from the web-site www.bonfiglioli.com.)
When a gearbox is supplied with no lubricant, it is recommended to fill it with a lubricant of a similar type, selected from those listed in its installation, operation and maintenance manual.
The permitted operating temperature range for these gearboxes is between -20°C and +40°C.

54 OTHERS INFORMATION ABOUT GEARBOX AND GEARMOTOR

Mounting positions, technical data, motor availability,moments of inertia and dimensions of **A-EX (Atex)** series don't change among equivalent **A** product series. All of these information can be obtained in the related chapters of this catalogue.

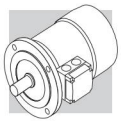

ELECTRIC MOTORS

M1 SYMBOLS AND UNITS OF MEASUREMENT

Symbols	Units of Measure	Description
$\cos\varphi$	–	Power factor
η	–	Efficiency
f_m	–	Power adjusting factor
I	–	Cyclic duration factor
I_N	[A]	Rated current
I_S	[A]	Locked rotor current
J_C	[Kgm^2]	Load moment of inertia
J_M	[Kgm^2]	Moment of inertia
K_c	–	Torque factor
K_d	–	Load factor
K_J	–	Inertia factor
M_A	[Nm]	Mean breakaway torque
M_B	[Nm]	Brake torque
M_N	[Nm]	Rated torque
M_L	[Nm]	Counter-torque during acceleration
M_S	[Nm]	Starting torque

Symbols	Units of Measure	Description
n	[min^{-1}]	Rated speed
P_B	[W]	Power drawn by the brake at 20°C
P_n	[kW]	Motor rated power
P_r	[kW]	Required power
t_1	[ms]	Brake response time with one-way rectifier
t_{1s}	[ms]	Brake response time with electronic-controlled rectifier
t_2	[ms]	Brake reaction time with a.c. disconnect
t_{2c}	[ms]	Brake reaction time with a.c. and d.c. disconnect
t_a	[°C]	Ambient temperature
t_f	[min]	Work time at constant load
t_r	[min]	Rest time
W	[J]	Braking work between service interval
W_{max}	[J]	Maximum brake work for each braking
Z	[1/h]	Permissible starting frequency, loaded
Z_0	[1/h]	Max. permissible unloaded starting frequency (I = 50%)



M2 GENERAL CHARACTERISTICS

M2.1 Production range

The asynchronous three-phase electric motors of BONFIGLIOLI RIDUTTORI's production, are available in basic designs IMB5 and IMB14 and derived versions, with the following polarities: 2, 4, 6, 2/4, 2/6, 2/8, 2/12.
The technical characteristics of compact motors, M type, are also supplied in this manual.

M2.2 Standards

The motors described in this catalogue are manufactured to the applicable standards shown in the following table.

(F 1)

Title	CEI	IEC
General requirements for rotating electrical machines	**CEI EN 60034-1**	**IEC 60034-1**
Terminal markings and direction of rotation of rotating machines	**CEI 2-8**	**IEC 60034-8**
Methods of cooling for electrical machines	**CEI EN 60034-6**	**IEC 60034-6**
Dimensions and output ratings for rotating electrical machines	**EN 50347**	**IEC 60072**
Classification of degree of protection provided by enclosures for rotating machines	**CEI EN 60034-5**	**IEC 60034-5**
Noise limits	**CEI EN 60034-9**	**IEC 60034-9**
Classification of type of construction and mounting arrangements	**CEI EN 60034-7**	**IEC 60034-7**
Rated voltage for low voltage mains power	**CEI 8-6**	**IEC 60038**
Vibration level of electric machines	**CEI EN 60034-14**	**IEC 60034-14**

The motors also comply with foreign standards adapted to IEC 60034-1 as shown here below.

(F 2)

DIN VDE 0530	Germany
BS5000 / BS4999	Great Britain
AS 1359	Australia
NBNC 51 - 101	Belgium
NEK - IEC 34	Norway
NF C 51	France
OEVE M 10	Austria
SEV 3009	Switzerland
NEN 3173	Netherlands
SS 426 01 01	Sweden

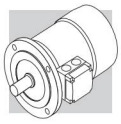

M2.3 Motors for USA and Canada

CUS

BN motors are available in NEMA Design C configuration (concerning electrical characteristics), in compliance with CSA (Canadian standard) C22.2 No. 100 and UL (Underwriters Laboratory) UL 1004-1. By specifying the option CUS the name plate is marked with both symbols shown here below.

C US

US power mains voltages and the corresponding rated voltages to be specified for the motor are indicated in the following table:

(F 3)

Frequency	Mains voltage	V_{mot}
60 Hz	208 V	**200 V**
	240 V	**230 V**
	480 V	**460 V**
	600 V	**575 V**

CUS option is applicable onto 50 Hz operating motors as well.

Motors with YY/Y connection (e.g. 230/460-60; 220/440-60) feature, as standard, a 9-stud terminal board. For same executions, as well as for 575V-60H tions, as well as for 575V-60Hz supply, the nominal rating is coincident with the correspondent 50Hz rating.
For DC brake motors type BN/M_FD and BN/M_AFD, the rectifier is connected to a single-phase 230 VAC supply voltage in the motor terminal box.
Brake power supply for brake motors is as follows:

(F 4)

BN_FD ; BN_AFD M_FD ; M_AFD
Wired to terminal box 1~230V a.c.

BN_FA ; BN_BA M_FA		Specify
Separate power supply	230V Δ - 60Hz	230SA
Separate power supply	460V Y - 60Hz	460SA

The CUS option does not apply to servo-ventilated motors or motors with the AFD brake.

M2.4 China Compulsory Certification

CCC

Electric motors destined for sale in the People's Republic of China have to be certified under the CCC (China Compulsory Certification) system. BN motors of up to 7 Nm in rated torque are available with CCC certification and a special nameplate bearing the mark shown below:

The CCC option does not apply to motors with the AFD brake.
CCC option is not currently available for servo - ventilated motors.

M2.5 Directives 2006/95/EC (LVD) and 2004/108/EC (EMC)

BN and M motors meet the requirements of Directives 2006/95/EC (Low Voltage Directive) and 2004/108/EC (Electromagnetic Compatibility Directive) and their name plates bear the CE mark.
As for the EMC Directive, construction is in accordance with standards CEI EN 60034-1, EN 61000-6-2, EN 61000-6-4.
Motors with FD and AFD brakes, when fitted with the suitable capacitive filter at rectifier input (option **CF**), meet the emission limits required by Standard EN 61000-6-3:2007 "Electromagnetic compatibility - Generic Emission Standard - Part 6-3 Residential, commercial and light industrial environment".
Motors also meet the requirements of standard CEI EN 60204-1 "Electrical equipment of machines".
The responsibility for final product safety and compliance with applicable directives rests with the manufacturer or the assembler who incorporate the motors as component parts.

M2.6 Tolerances

As per the Norms applicable the tolerances here below apply to the following quantities.

(F 5)

-0.15 (1 - η) P ≤ 50kW	Efficiency
-(1 - cosφ)/6 min 0.02 max 0.07	Power factor
±20% *	Slip
+20%	Locked rotor current
-15% +25%	Locked rotor torque
-10%	Max. torque

* ± 30% for motors with Pn < 1 kW

M3 MECHANICAL FEATURES

M3.1 Versions

EC-normalised BN motors are available in the design versions indicated in table (F6) as per Standards CEI EN 60034-14.

Mounting versions are:

IM B5 (basic)
IM V1, IM V3 (derived)
IM B14 (basic)
IM V18, IM V19 (derived)

IM B5 design motors can be installed in positions IM V1 and IM V3; IM B14 design motors can be installed in positions IM V18 and IM V19.
In such cases, the basic design IM B5 or IM B14 is indicated on the motor name plate.
In design versions with a vertically located motor and shaft downwards, it is recommended to request the drip cover (always necessary for brake motors). This facility, included in the option list should be specified when ordering as it does not come as a standard device

(F 6)

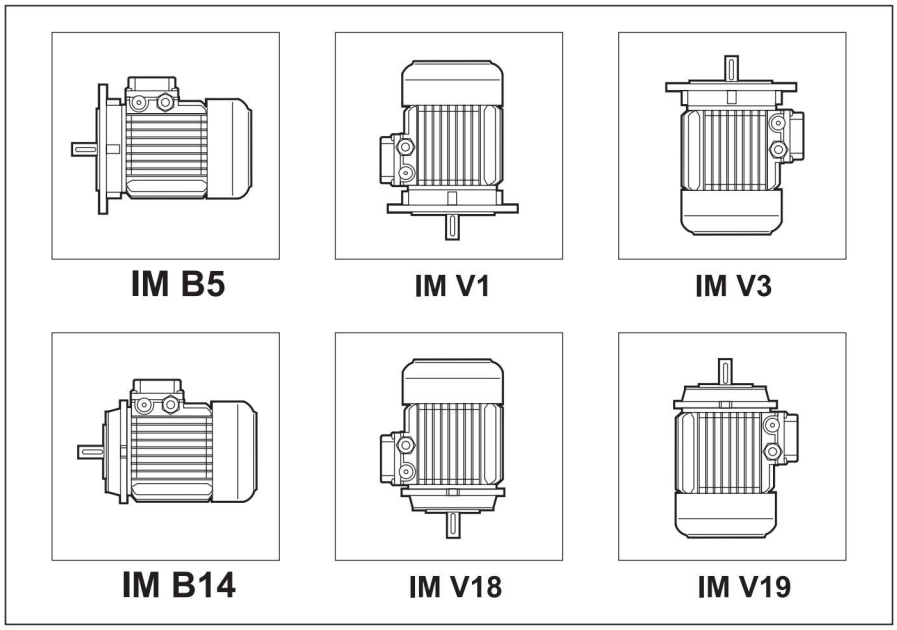

Flanged motors can be supplied with a reduced mounting interface, as shown in chart (F7) below.

(F 7)

	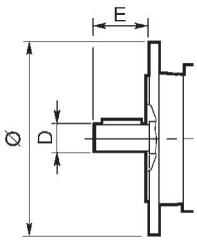					
	BN 71	**BN 80**	**BN 90**	**BN 100**	**BN 112**	**BN 132**
	DxE - Ø					
B5R (1)	11x23 - 140	14x30 - 160	19x40 - 200	24x50 - 200	24x50 - 200	28x60 - 250
B14R (2)	11x23 - 90	14x30 - 105	19x40 - 120	24x50 - 140	—	—

(1) flange with through holes
(2) flange with threaded holes

M3.2 Degree of protection

IP..

The following chart provides an overview of the degrees of protection available.
In addition to the degree of protection specified when ordering, motors to be installed outdoors require protection against direct sunlight and also – when they are to be installed vertically down – a drip cover to prevent the ingress of water and soli
the ingress of water and solid particles (option **RC**).

(F 8)

		IP 54	IP 55	IP 56
BN	**M**		standard	
BN_FD **BN_AFD** **BN_FA**	**M_FD** **M_AFD** **M_FA**	standard		

M3.3 Cooling

The motors are externally ventilated (IC 411 to CEI EN 60034-6) and are equipped with a plastic fan working in both directions.
The motors must be installed allowing sufficient space between fan cowl and the nearest wall to ensure free air intake and allow access for maintenance purposes on motor and brake, if supplied.
Independent, forced air ventilation (IC 416) can be supplied on request (option U1).
This solution enables to increase
the motor duty factor when driven by an inverter and operating at reduced speed.

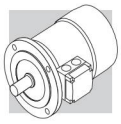

M3.4 Direction of rotation

Rotation is possible in both directions. If terminals U1, V1, and W1 are connected to line phases L1,L2 and L3, clockwise rotation (looking from drive end) is obtained. For counterclockwise rotation, switch two phases.

M3.5 Noise

Noise levels, measured using the method prescribed by ISO 1680 Standards, are within the maximum levels specified by Standards CEI EN 60034-9.

M3.6 Vibrations and balancing

Rotor shafts are balanced with half key fitted and fall within the vibration class N, as per Standard CEI EN 60034-14.
If a further reduced noise level is required improved balancing carequired improved balancing can be optionally requested (class B).
Table below shows the value for the vibration velocity for standard (A) and improved (B) balancing.

(F 9)

Vibration class	Angular velocity n [min^{-1}]	Limits of the vibration velocity [mm/s] **BN 56 ≤ H ≤ BN 200** **M05 ≤ H ≤ M5**
A	600 < n < 3600	1.6
B	600 < n < 3600	0.70

Values refer to measures with freely suspended motor in unloaded conditions.

M3.7 Terminal box

Terminal board features 6 studs for eyelet terminal connection.
A ground terminal is also supplied for earthing of the equipment.
Terminals number and type are shown in the following table.
For brake power supply, please read par. M6, M7 (brake FD and AFD), M8, M9 (brake FA).
Brakemotors house the a.c./d.c. rectifier (factory pre-wired) inside the terminal box.
Wiring instructions are provided either in the box or in the user manual.

(F 10)

		No. of terminals	Terminal threads	Wire max cross section area mm^2
BN 56...BN 71	**M05, M1**	6	M4	2.5
BN 80, BN 90	**M2**	6	M4	2.5
BN 100...BN 112	**M3**	6	M5	6
BN 132...BN 160MR	**M4**	6	M5	6
BN 160M...BN 180M	**M5**	6	M6	16
BN 180L...BN 200L	**–**	6	M8	25

M3.8 Cable entry

The holes used to bring cables to terminal boxes use metric threads in accordance with standard EN 50262 as indicated in the table here after.

(F 11)

		Cable entry	Max. cable diameter allowed [mm]
BN 63	**M05**	2 x M20 x 1.5	13
BN 71	**M1**	2 x M25 x 1.5	17
BN 80 - BN 90	**M2**	2 x M25 x 1.5	17
BN 100	**M3**	2 x M32 x 1.5	21
		2 x M25 x 1.5	17
BN 112	**—**	2 x M32 x 1.5	21
		2 x M25 x 1.5	17
BN 132...BN 160MR	**M4**	4 x M32 x 1.5	21
BN 160M...BN 200L	**M5**	2 x M40 x 1.5	28

M3.9 Bearings

Life lubricated preloaded radial ball bearings are used, types are shown in the chart here under.
Calculated endurance lifetime L_{10h}, as per ISO 281, in unloaded condition, exceeds 40000 hrs.
DE = drive end
NDE = non drive end

(F 12)

	**DE**	**NDE**	
	M, M_FD, M_AFD, M_FA	**M**	**M_FD, M_AFD, M_FA**
M05	6004 2Z C3	6201 2Z C3	6201 2RS C3
M1	6004 2Z C3	6202 2Z C3	6202 2RS C3
M2	6007 2Z C3	6204 2Z C3	6204 2RS C3
M3	6207 2Z C3	6206 2Z C3	6206 2RS C3
M4	6309 2Z C3	6308 2Z C3	6308 2RS C3
M5	6309 2Z C3	6309 2Z C3	6309 2RS C3

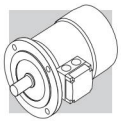

(F 13)

	DE	NDE	
	BN, BN_FD, BN_AFD, BN_FA	BN	BN_FD, BN_AFD, BN_FA
BN 56	6201 2Z C3	6201 2Z C3	–
BN 63	6201 2Z C3	6201 2Z C3	6201 2RS C3
BN 71	6202 2Z C3	6202 2Z C3	6202 2RS C3
BN 80	6204 2Z C3	6204 2Z C3	6204 2RS C3
BN 90	6205 2Z C3	6205 2Z C3	6305 2RS C3
BN 100	6206 2Z C3	6206 2Z C3	6206 2RS C3
BN 112	6306 2Z C3	6306 2Z C3	6306 2RS C3
BN 132	6308 2Z C3	6308 2Z C3	6308 2RS C3
BN 160MR	6309 2Z C3	6308 2Z C3	6308 2RS C3
BN 160M/L	6309 2Z C3	6309 2Z C3	6309 2RS C3
BN 180M	6310 2Z C3	6309 2Z C3	6309 2RS C3
BN 180L	6310 2Z C3	6310 2Z C3	6310 2RS C3
BN 200L	6312 2Z C3	6310 2Z C3	6310 2RS C3

M4 ELECTRICAL CHARACTERISTICS

M4.1 Voltage

Single speed motors are provided in standard execution either for nominal voltage 230 / 400 V Δ/Y, 50 Hz, or 400 / 690 V Δ/Y, 50 Hz, with a voltage tolerance of ± 10%, according to what is specified on the below table.
On all the motors BN and M, for which the voltage / frequency configuration is not included on the below table, the voltage tolerance is reduced down to ± 5%.
For the operation out of the tolerance boundaries, the temperature may exceed by 10 K the limit provided by the adopted insulation class.
The motors are suitable for operation on distribution European grid with voltage complying with the pubblication IEC 60038.

(F 14)

			V_{mot} ± 10 % 3 ~	Configuation
IE1	**BN 56 ... BN 132**	**M0 ... M4**	230 / 400 V - Δ/Y - 50 Hz	Standard
			400 / 690 V - Δ/Y - 50 Hz	On request at no extra charge
			460 V Y - 60 Hz	Standard
	BN 160 ... 200	**M5**	400 / 690 V - Δ/Y - 50 Hz	Standard
			460 V Δ - 60 Hz	Standard

[1] 4 pole motor only

The only rated voltage for motors type 50Hz and all double speed motors is 400V.
Applicable tolerances as per CEI EN 60034-1.

The table below shows the wiring options available.

(F 15)

Pole		Wiring options
2	**BN 63 ... BN 200**	Δ / Y (²)
4	**BN 56 ... BN 200**	
6	**BN 63 ... BN 200**	
8	**BN 71 ... BN 132**	
2/4	**BN 63 ... BN 132**	Δ / YY (Dahlander)
2/6	**BN 71 ... BN 132**	Y / Y (Two windings)
2/8	**BN 71 ... BN 132**	
2/12	**BN 80 ... BN 132**	
4/6	**BN 71 ... BN 132**	
4/8	**BN 80 ... BN 132**	Δ / YY (Dahlander)

(²) Motors with voltage in ratio 2 (ex. 230/460 - 60) will be equipped with a 9 pin terminal box with winding connection either Δ Δ/ Δ or YY / Y (except 6 pole BN 63 Δ / Y)

M4.2 Frequency

Rated output power BN / M for 60 Hz operation is shown in the following diagram.

(F 16)

		2P	4P	6P
		P_n [kW]		
BN 56A	**–**	–	0.06	–
BN 56B	**M0B**	–	0.10	–
BN 63A	**M05A**	0.21	0.14	0.10
BN 63B	**M05B**	0.30	0.21	0.14
BN 71A	**M05C**	0.45	0.30	0.21
BN 71B	**M1SD**	0.65	0.45	0.30
BN 80A	**M1LA**	0.90	0.65	0.45
BN 80B	**M2SA**	1.30	0.90	0.65
BN 90S	**M2SB**	–	1.30	0.90
BN 90SA	**M2SB**	1.8	–	–
BN 90L	**M3SA**	2.5	–	1.3
BN 90LA	**M3SA**	–	1.8	–
BN 100L	**M3LA**	3.5	–	–
BN 100LA	**M3LA**	–	2.5	1.8
BN 100LB	**M3LB**	4.7	3.5	2.2

		2P	4P	6P
		P_n [kW]		
BN 112M	**M3LB**	4.7	4.7	2.5
	M3LC	–	4.7	2.5
BN 132S	**M4SA**	–	6.5	3.5
BN 132SA	**M4SA**	6.3	–	–
BN 132SB	**M4SB**	8.7	–	–
BN 132M	**M4LA**	11	–	–
BN 132MA	**M4LA**	–	8.7	4.6
BN 132MB	**M4LB**	–	11	6.5
BN 160MR	**M4LC**	12.5	12.5	–
BN 160MB	**M5SB**	17.5	–	–
BN 160M	**M5SA**	–	–	8.6
BN 160L	**M5S**	21.5	17.5	12.6
BN 180M	**M5LA**	24.5	21.5	–
BN 180L	**–**	–	25.3	17.5
BN 200L	**–**	34	34	22

Double speed BN / M motors supplied at 60 Hz will have an increase of nominal power, referred to 50 Hz, equal to 15%.
If a nominal power rating, equal to the normalised nominal power rating at 50 Hz, was requested to be on a nameplate of a motor meant to be voltage supplied at 60 Hz, the PN option shall be specified on the motor designation.
Motors normally designed for a 50 Hz frequency may be used on a 60 Hz operating grid, but the related data shall be updated according to the following table.

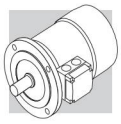

(F 17)

50 Hz	60 Hz			
V - 50 Hz	**V** - 60 Hz	**Pn** - 60 Hz	$\mathbf{M_n}$, $\mathbf{M_a/M_n}$ - 60 Hz	**n** [min^{-1}] - 60 Hz
230/400 Δ/Y	220 - 240 Δ	1	0.83	1.2
	380 - 415 Y			
400/690 Δ/Y	380 - 415 Δ			
230/400 Δ/Y	265 - 280 Δ	1.15	1	1.2
	440 - 480 Y			
400/690 Δ/Y	440 - 480 Δ			

M4.3 Ambient temperature

Catalogue rating values are calculated for 50 Hz operation and for standard ambient conditions (temperature 40 °C; elevation <1000 m a.s.l.) as per the CEI EN 60034-1 Standards.
The motors can be used within the 40 - 60 °C temperature range with rated power output adjusted by factors given in the following charts.

(F 18)

Ambient temperature (°C)	40°	45°	50°	55°	60°
Permitted power as a % of rated power	100%	95%	90%	85%	80%

Should a derating factor higher than 15% apply please consult factory.

M4.4 Insulation class

CL F

Bonfiglioli motors use class **F** insulating materials (enamelled wire, insulators, impregnation resins) as compare to the standard motor.

CL H

Motors manufactured in insulation class **H** are available at request.
In standard motors, stator windings over temperature normally stays below the 80 K limit corresponding to class B over temperature.
A careful selection of insulating components makes the motors compatible with tropical climates and normal vibration.
For applications involving the presence of aggressive chemicals or high humidity, contact Bonfiglioli Engineering for assistance with product selection.
Not available for motors in compliance with CSA e UL standards (CUS option).

(F 19)

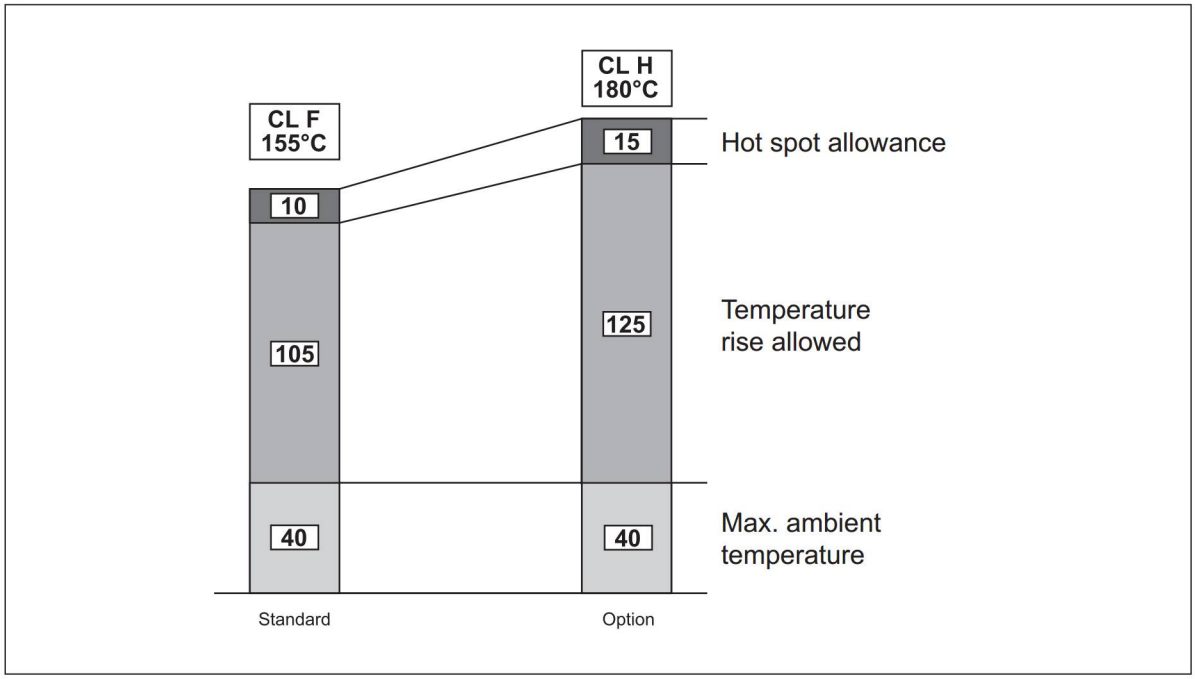

M4.5 Type of duty

Unless otherwise specified, catalogue motor power refers to continuous duty S1.
Any operating conditions other than S1 duty must be identified in accordance with duty cycle definitions laid down in standards CEI EN 60034-1.
For duty cycles S2 and S3, the power increase co-efficient reported in the following table may be used. Please note that the table provided below applies to single-speed motors.
As an alternative to S1 continuous duty, one of the following values can be specified at the product configuration stage: S2, S3 or S9. The motor nameplate will be marked with an increased power rating to suit the type of duty, and with specific electrical data and a duty type of S2-30 min, S3-70% or S9 respectively.
For further details, contact Bonfiglioli's Technical Service.
Please contact Bonfiglioli Engineering for the power increase coefficients applicable to switch-pole motors.

(F 20)

	Duty						
	S2			**S3 ***			**S4 - S9**
	Cycle duration (min)			Cyclic duration factor (I)			
	10	**30 (*)**	**60**	**25%**	**40%**	**70% (*)**	Consult factory
f_m	1.35	1.15	1.05	1.25	1.15	1.1	

* Cycle duration must, in any event, be equal to or less than 10 minutes; if this time is exceeded, please contact our Technical Service.
(*) Default values from options.

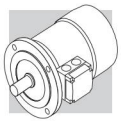

M4.5.1 Cyclic duration factor:

$$I = \frac{t_f}{t_f + t_r} \cdot 100 \qquad (23)$$

t_f = work time under constant load
t_r = rest time

M4.5.2 Limited duration duty S2

This type of duty is characterized by operation at constant load for a limited time, which is shorter than the time required to reach thermal equilibrium, followed by a rest period of sufficient duration to restore ambient temperature in the motor.

M4.5.3 Periodical intermittent duty S3:

This type of duty is characterized by a sequence of identical operation cycles, each including a constant load operation period and a rest period.
For this type of duty, the starting current does not significantly influence overtemperature.

M4.6 Inverter-controlled motors

The electric motors of series BN and M may be used in combination with PWM inverters with rated voltage at transformer input up to 500 V.Standard motors use a phase insulating system with separators, class 2 enamelled wire and class H impregnation resins (1600V peak-to-peak voltage pulse capacity and rise edge t_s > 0.1µs at motor terminals). Table (F30) shows the typical torque/speed curves referred to S1 duty for motors with base frequency f_b = 50 Hz.
Because ventilation is somewhat impaired in operation at lower frequencies (about 30 Hz), standard motors with incorporated fan (IC411) require adequate torque derating or - alternately - the addition of a separate supply fan cooling.
Above base frequency, upon reaching the maximum output voltage of the inverter, the motor enters a steady-power field of operation, and shaft torque drops with ratio (f/f_b).
As motor maximum torque decreases with $(f/f_b)^2$, the allowed overloading must be reduced progressively.

(F 21)

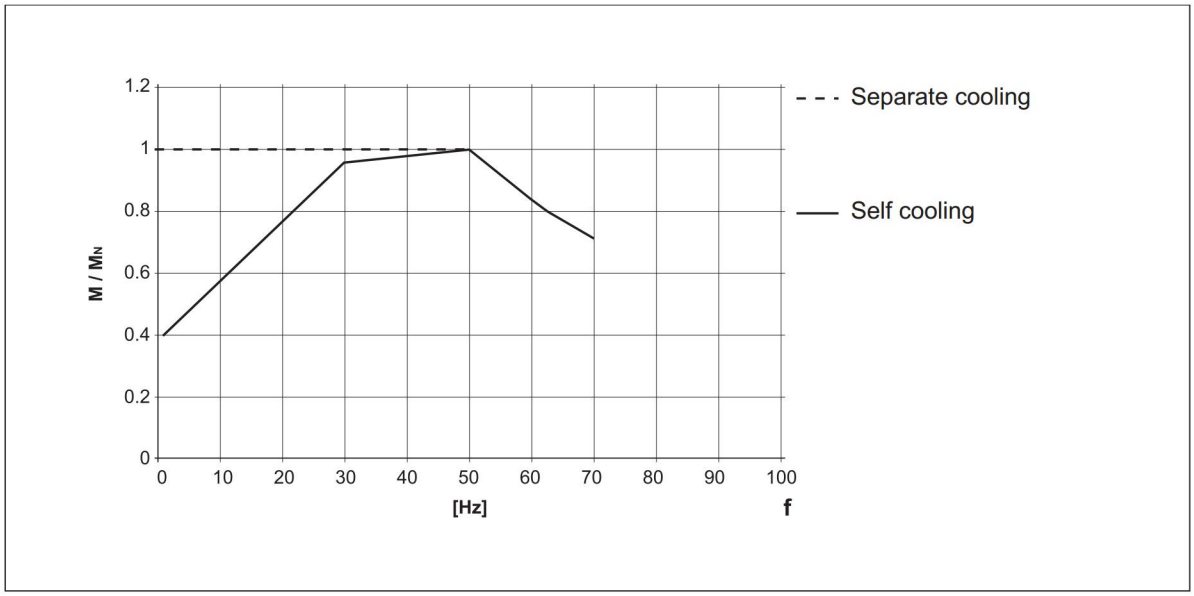

Table (F22) reports the mechanical limit speed for motor operation above rated frequency:

(F 22)

		n [min^{-1}]		
		2p	**4p**	**6p**
≤ BN 112	**M05…M3**	5200	4000	3000
BN 132...BN 200L	**M4, M5**	4500	4000	3000

Above rated speed, motors generate increased mechanical vibration and fan noise. Class B rotor balancing is highly recommended in these applications. Installing a separate supply fan cooling may also be advisable.

Remote-controlled fan and brake (if fitted) must always be connected direct to mains power supply.

M4.7 Permissible starts per hour, Z

The rating charts of brakemotors lend the permitted number of starts Z_0, based on 50% intermittence and for unloaded operation.
The catalogue value represents the maximum number of starts per hour for the motor without exceeding the rated temperature for the insulation class F.
To give a practical example for an application characterized by inertia J_c, drawing power P_r and requiring mean torque at start-up M_L the actual number of starts per hour for the motor can be calculated approximately through the following equation:

$$Z = \frac{Z_0 \cdot K_c \cdot K_d}{K_J} \qquad (24)$$

where:

$K_J = \frac{J_m + J_c}{J_m}$	inertia factor
$K_c = \frac{M_a - M_L}{M_a}$	torque factor
$K_d =$	load factor see table (F23)

(F 23)

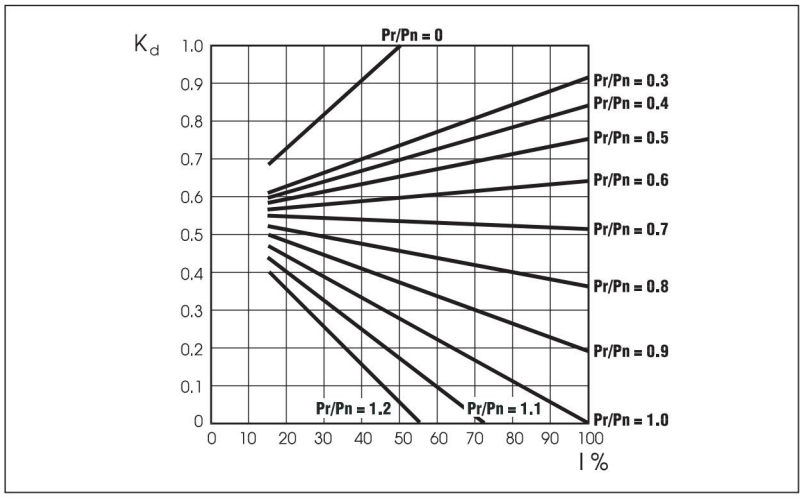

If actual starts per hour is within permitted value (Z) it may be worth checking that braking work is compatible with brake (thermal) capacity W_{max} also given in table (F30), (F40) and (F48) and dependent on the number of switches (c/h).

M5 ASYNCHRONOUS BRAKE MOTORS

M5.1 Operation

Versions with incorporated brake use spring-applied DC (FD, AFD option) or AC (FA options) brakes. All brakes are designed to provide fail-safe operation, meaning that they are applied by spring-action in the event of power failure.

(F 24)

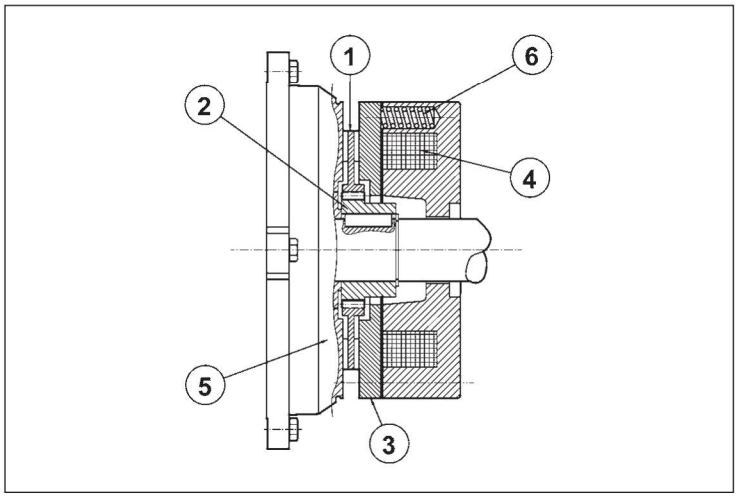

Key:
① brake disc
② disc carrier
③ pressure plate
④ brake coil
⑤ motor rear shield
⑥ brake springs

When voltage is interrupted, pressure springs push the armature plate against the brake disc. The disc becomes trapped between the armature plate and motor shield and stops the shaft from rotation.
When the coil is energized, a magnetic field strong enough to overcome spring action attracts the armature plate, so that the brake disc – which is integral with the motor shaft – is released.

M5.2 Most significant features

- High braking torques (normally $M_b \approx 2$ Mn), braking torque adjustment.
- Steel brake disc with double friction lining (low-wear, asbestos-free lining).
- Hexagonal seat on motor shaft fan end (N.D.E.) for manual rotation (not compatible with options PS, RC, TC, U1, U2, EN1, EN2, EN3, EN4, EN5, EN6).
- Manual release lever (options **R** and **RM** for BN/M_FD; option **R** for BN/M_FA).
- Manual mechanical release (option **R** for BN/M_AFD).
- Corrosion-proof treatment on all brake surfaces.
- Insulation class F.

M6 DC BRAKE MOTORS TYPE BN_FD and M_FD

Frame sizes: BN 63 … BN 200L / M05 ... M5

(F 25)

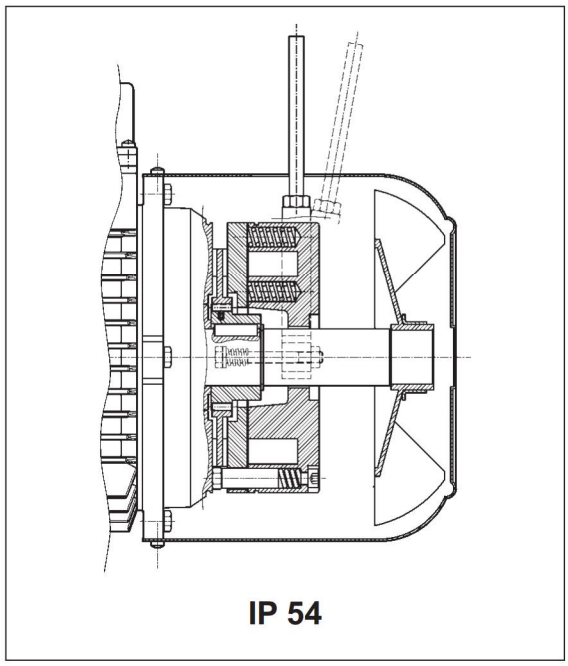

IP 54

(F 26)

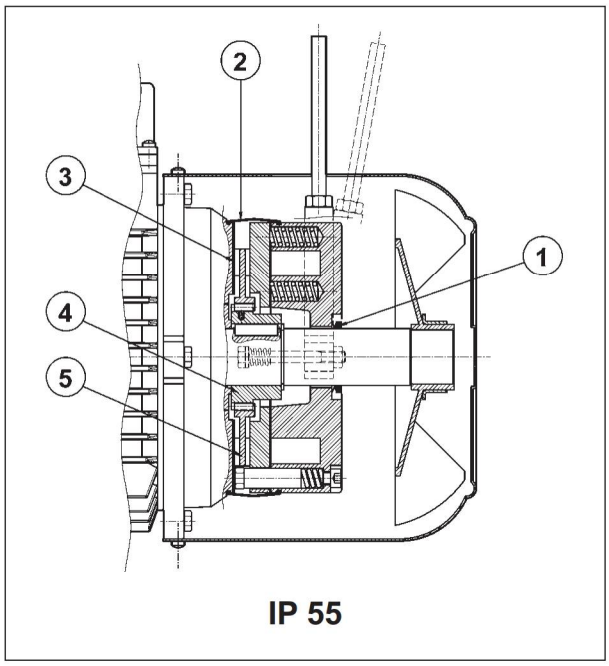

IP 55

Direct current toroidal-coil electromagnetic brake bolted onto motor shield. Preloading springs provide axial positioning of magnet body.
Brake disc slides axially on steel hub shrunk onto motor shaft with anti-vibration device.
Brake torque factory setting is indicated in the corresponding motor rating charts. Braking torque may be modified by changing the type and/or number of springs.
At request, motors may be equipped with manual release lever with automatic return (**R**) or system for holding brake in the released position (**RM**).
See variant at paragraph “BRAKE RELEASE SYSTEMS” for available release lever locations.
FD brakes ensure excellent dynamic performance with low noise. DC brake operating characteristics may be optimized to meet application requirements by choosing from the various rectifier/power supply and wiring connection options available.
For applications involving lifting and/or high hourly energy dissipation, contact Bonfiglioli’s Technical Service.

M6.1 Degree of protection

Standard protection class is IP54.
Brake motor FD is also available in protection class **IP55**, which mandates the following variants:

① V-ring at N.D.E. of motor shaft
② dust and water-proof rubber boot
③ stainless steel ring placed between motor shieldand brake disc
④ stainless steel hub
⑤ stainless steel brake disc

M6.2 FD brake power supply

A rectifier accommodated inside the terminal box feeds the DC brake coil. Wiring connection across rectifier and brake coil is performed at the factory.
On all single-pole motors, rectifier is connected to the motor terminal board.
Rectifier standard power supply voltage VB is as indicated in the following table, regardless of mains frequency:

(F 27)

2, 4, 6 P					**1 speed**
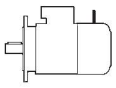		**BN_FD / M_FD** V_{mot} ± 10% 3 ~	**BN_FD / M_FD** V_B ± 10% 1 ~	brake connected to terminal board power supply	separate power supply
BN 63…BN 132	**M05...M4LB**	230/400 V – 50 Hz	230 V	standard	specify **V_B SA** o **V_B SD**
BN 160…BN 200	**M4LC...M5**	400/690 V – 50 Hz	400 V	standard	specify **V_B SA** o **V_B SD**

Switch-pole motors feature a separate power supply line for the brake with rectifier input voltage V_B as indicated in the table below:

(F 28)

2/4, 2/6, 2/8, 2/12, 4/6, 4/8 P					**2 speed**
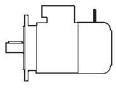		**BN_FD / M_FD** V_{mot} ± 10% 3 ~	**BN_FD / M_FD** V_B ± 10% 1 ~	brake connected to terminal board power supply	separate power supply
BN 63…BN 132	**M05...M4LB**	400 V – 50 Hz	230 V	⛔	specify **V_B SA** o **V_B SD**

The diode half-wave rectifier (VDC ≈ 0,45 x VAC) is available in versions **NB, SB, NBR** e **SBR**, as detailed in the table below:

(F 29)

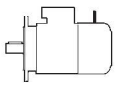		brake	standard	at request
BN 63	**M05**	**FD 02**	**NB** 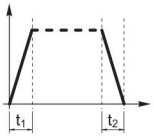	**SB** 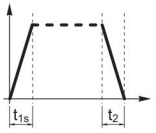
BN 71	**M1**	**FD 03**		
		FD 53		**SBR** 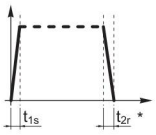
BN 80	**M2**	**FD 04**		
BN 90S	**—**	**FD 14**		
BN 90L	**—**	**FD 05**		**NBR** 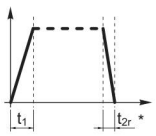
BN 100	**M3**	**FD 15**		
—		**FD 55**	**SB** 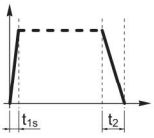	**SBR** 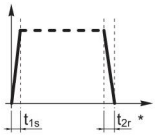
BN 112	**—**	**FD 06S**		
BN 132...160MR	**M4**	**FD 56**		
BN 160L - BN 180M	**M5**	**FD 06**		
BN 180L - NM 200L	**—**	**FD 07**		

(*) $t_{2c} < t_{2r} < t_2$

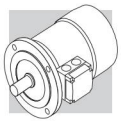

Rectifier **SB** with electronic energizing control over-energizes the electromagnet upon power-up to cut brake release response time and then switches to normal half-wave operation once the brake has been released.

Use of the **SB** rectifier is mandatory in the event of:
- high number of operations per hour
- reduced brake release response time
- brake is exposed to extreme thermal stress

Rectifiers **NBR** or **SBR** are available for applications requiring quick brake intervention (braking condition reinstatement) response.
These rectifiers complement the **NB** and **SB** types as their electronic circuit incorporates a static switch that de-energizes the brake quickly in the event voltage is missing.
This arrangement ensures short brake release response time with no need for additional external wiring and contacts.
Optimum performance of rectifiers **NBR** and **SBR** is achieved with separate brake power supply.
Versions available: 230Vac ±10%, 400Vac ± 10%, 50/60 Hz (with power supply); 100Vdc ±10%, 180Vdc ± 10% (with SD option).

M6.3 FD brake technical specifications

The table below reports the technical specifications of DC brakes FD.

(F 30)

Brake	Brake torque M_b [Nm] springs			Release		Braking		W_{max} per brake operation [J]			W	P
				t_1	$t_{1\,s}$	t_2	t_{2c}					
	6	4	2	[ms]	[ms]	[ms]	[ms]	10 s/h	100 s/h	1000 s/h	[MJ]	[W]
FD02	–	3.5	1.75	30	15	80	9	4500	1400	180	15	17
FD03	5	3.5	1.75	50	20	100	12	7000	1900	230	25	24
FD53	7.5	5	2.5	60	30	100	12					
FD04	15	10	5	80	35	140	15	10000	3100	350	30	33
FD14												
FD05	40	26	13	130	65	170	20	18000	4500	500	50	45
FD15	40	26	13	130	65	170	20					
FD55	55	37	18	–	65	170	20					
FD06S	60	40	20	–	80	220	25	20000	4800	550	70	55
FD56	–	75	37	–	90	250	20	29000	7400	800	80	65
FD06		100	50		100	250	20					
FD07	150	100	50	–	120	200	25	40000	9300	1000	130	65
FD08*	250	200	170	–	140	350	30	60000	14000	1500	230	100
FD09**	400	300	200	–	200	450	40	70000	15000	1700	230	120

* brake torque values obtained with 9, 7 and 6 springs, respectively

** brake torque values obtained with 12, 9 and 6 springs, respectively

t_1 = brake release time with half-wave rectifier
t_{1s} = brake release time with over-energizing rectifier
t_2 = brake engagement time with AC line interruption and separate power supply
t_{2c} = brake engagement time with AC and DC line interruption – Values for t1, t1s, t2, t2c indicated in the tab. (F30) are referred to brake set at maximum torque, medium air gap and rated voltage
W_{max} = max energy per brake operation
W = braking energy between two successive air gap adjustments
P_b = brake power absorption at 20 °C
M_b = static braking torque (±15%)
s/h = starts per hour

The brake pad wear depends on the operating/ambient conditions (temperature, humidity, angular speed, specifica pressure); Therefore the declared wear rate must be considered as indicative.

M6.4 FD brake connections

On standard single-pole motors, the rectifier is connected to the motor terminal board at the factory. For switch-pole motors and where a separate brake power supply is required, connection to rectifier must comply with brake voltage VB stated in motor name plate.
Because the load is of the inductive type, brake control and DC line interruption must use contacts from the usage class AC-3 to IEC 60947-4-1.

Table (F31) – Brake power supply from motor terminals and AC line interruption
Delayed stop time t_2 and function of motor time constants.
Mandatory when soft-start/stops are required.
Table (F32) – Brake coil with separate power supply and AC line interruption
Normal stop time independent of motor.
Achieved stop times t_2 are indicated in the table (F30).
Table (F33) – Brake coil power supply from motor terminals and AC/DC line interruption.
Quick stop with operation times t_{2c} as per table (F30).
Table (F34) – Brake coil with separate power supply and AC/DC line interruption.
Stop time decreases by values t_{2c} indicated in the table (F30).

The brake may be voltage supplied directly from the motor terminal box (from tab. F31 to tab. F34) only if the nominal voltage of the brake is the same as the smaller voltage of the motor.

(F 31)

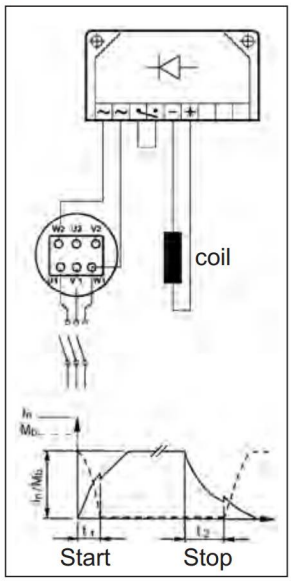

(F 32)

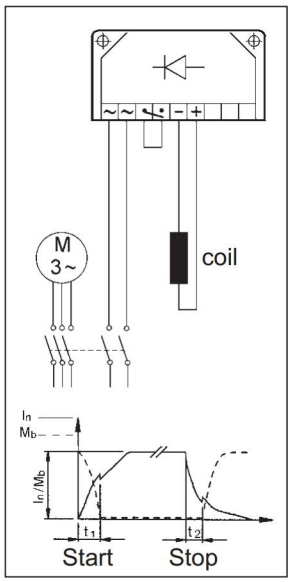

(F 33)

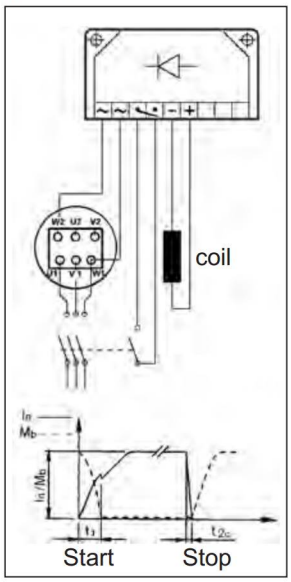

(F 34)

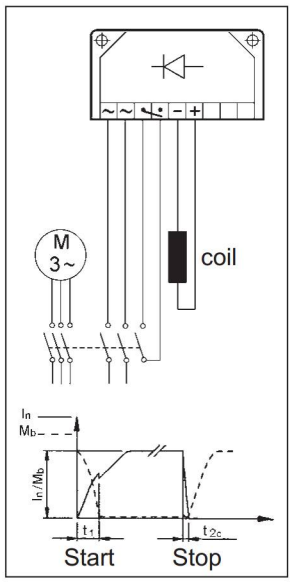

M7 DC BRAKE MOTORS TYPE BN_AFD and M_AFD

Frame sizes: BN 63 … BN 200L / M05 ... M5

(F 35)

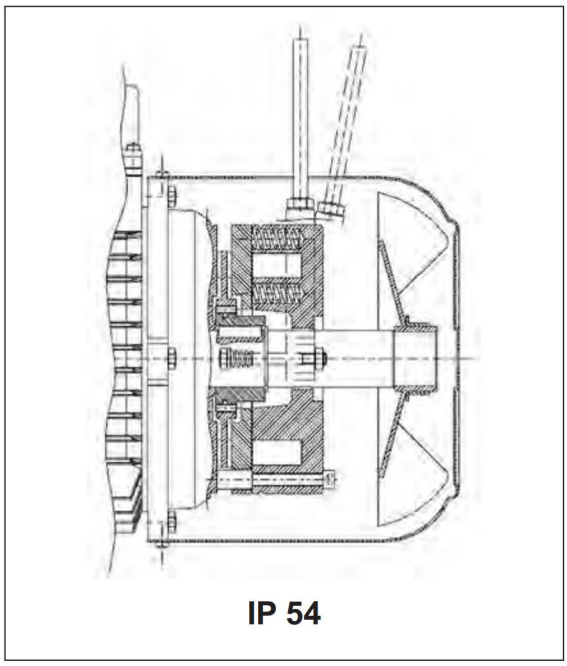

IP 54

(F 36)

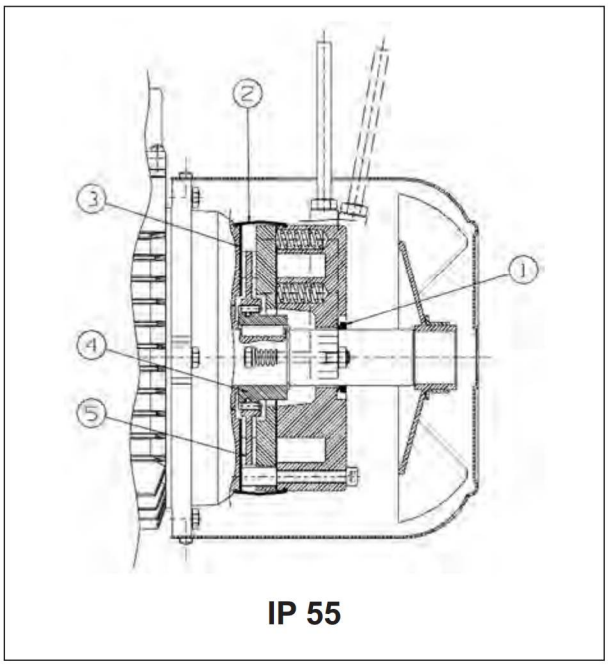

IP 55

Maintenance free up to the maximum permissible wear of brake disc. The air gap of AFD brakes is preset and it does not have to be set

Direct current toroidal-coil electromagnetic brake bolted onto motor shield.
Brake disc slides axially on steel hub shrunk onto motor shaft with anti-vibration device.
Brake torque factory setting is indicated in the corresponding motor rating charts. Braking torque may be modified by changing the type and/or number of springs.
At request, motors may be equipped with manual release lever with automatic return (**R**) see variant at paragraph “BRAKE RELEASE SYSTEMS” for available release lever locations.
AFD brakes ensure excellent dynamic performance with low noise. DC brake operating characteristics may be optimized to meet application requirements by choosing from the various rectifier/power supply and wiring connection options available.
The AFD brake is recommended for applications in which it is used as a holding brake.
For applications involving lifting and/or high hourly energy dissipation, contact Bonfiglioli’s Technical Service.

M7.1 Degree of protection

Standard protection class is IP54.
Brake motor AFD is also available in protection class **IP55**, which mandates the following variants:

① V-ring at N.D.E. of motor shaft
② dust and water-proof rubber boot
③ stainless steel ring placed between motor shieldand brake disc
④ stainless steel hub
⑤ stainless steel brake disc

M7.2 AFD brake power supply

A rectifier accommodated inside the terminal box feeds the DC brake coil. Wiring connection across rectifier and brake coil is performed at the factory.
On all single-pole motors, rectifier is connected to the motor terminal board.
Rectifier standard power supply voltage VB is as indicated in the following table, regardless of mains frequency:

(F 37)

2, 4, 6 P					**1 speed**
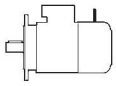		**BN_AFD / M_AFD** V_{mot} ± 10% 3 ~	V_B ± 10% 1 ~	brake connected to terminal board power supply	separate power supply
BN 63…BN 132	**M05...M4LB**	230/400 V – 50 Hz	230 V	standard	specify **V_B SA** o **V_B SD**
BN 160MR	**M4LC**	400/690 V – 50 Hz	400 V	standard	specify **V_B SA** o **V_B SD**

Switch-pole motors feature a separate power supply line for the brake with rectifier input voltage V_B as indicated in the table below:

(F 38)

2/4, 2/6, 2/8, 2/12, 4/6, 4/8 P					**2 speed**
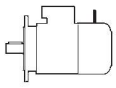		**BN_AFD / M_AFD** V_{mot} ± 10% 3 ~	V_B ± 10% 1 ~	brake connected to terminal board power supply	separate power supply
BN 63…BN 132	**M05...M4LB**	400 V – 50 Hz	230 V	⛔	specify **V_B SA** o **V_B SD**

The diode half-wave rectifier (VDC ≈ 0,45 x VAC) is available in versions **SB** and **SBR**, as detailed in the table below:

(F 39)

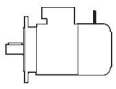		brake	~/= standard	at request
BN 63	**M05**	**AFD 02**		
BN 71	**M1**	**AFD 03**		
BN 80	**M2**	**AFD 04**		
BN 90S	**—**	**AFD 14**		
BN 90L	**—**	**AFD 05**		
BN 100	**M3**	**AFD 15**		
BN 112	**—**	**AFD 06S**		
BN 132...160MR	**M4**	**AFD 06**		
		AFD 07		

SB 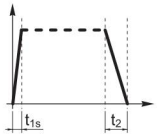

SBR 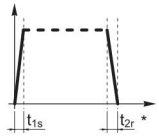

(*) $t_{2c} < t_{2r} < t_2$

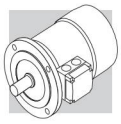

Rectifier **SB** with electronic energizing control over-energizes the electromagnet upon power-up to cut brake release response time and then switches to normal half-wave operation once the brake has been released.

Use of the **SB** rectifier is mandatory in the event of:
- high number of operations per hour
- reduced brake release response time
- brake is exposed to extreme thermal stress

Rectifiers **SBR** are available for applications requiring quick brake intervention (braking condition reinstatement) response.
These rectifiers complement the **SB** types as their electronic circuit incorporates a static switch that de-energizes the brake quickly in the event voltage is missing.
This arrangement ensures short brake release response time with no need for additional external wiring and contacts.
Optimum performance of rectifiers **SBR** is achieved with separate brake power supply.
Versions available: 230 V ac ±10%, 400 V ac ± 10%, 50/60 Hz (with power supply); 100 V dc ±10%, 180 V dc ± 10% (with SD option).

M7.3 AFD brake technical specifications

The table below reports the technical specifications of DC brakes AFD.

(F 40)

Brake	Brake torque M_b [Nm] springs			Air gap		Release	Braking		W_{max} per brake operation [J]			W	P
				tin	tmax	$t_{1\,s}$	t_2	t_{2c}					
	6	4	2	(± 0.1 mm)		[ms]	[ms]	[ms]	10 s/h	100 s/h	1000 s/h	[MJ]	[W]
AFD 02	—	3.5	1.8	0.3	0.7	20	110	10	4500	1400	160	40	15
AFD 03	7.5	5	2.5	0.3	0.7	35	140	15	7000	1900	210	60	21
AFD 04 / **AFD 14**	15	10	5	0.4	0.8	55	180	15	11000	3100	350	75	27
AFD 05 / **AFD 15**	40	26	13	0.4	0.8	85	240	25	18000	4500	500	125	37
AFD 06S	60	40	20	0.45	0.9	110	280	30	25000	6300	700	175	47
AFD 06	100	75(*) / 62(*)	37	0.45	0.9	130	330	30	29000	7400	800	200	50
AFD 07	150	100	50	0.45	0.95	170	350	30	40000	9300	1000	320	55

(*) depending on the type of springs

tin = air gap with new brake disk
tmax = maximum air gap which is necessary to replace the brake disc
t_{1s} = brake release time with over-energizing rectifier
t_2 = brake engagement time with AC line interruption and separate power supply
t_{2c} = brake engagement time with AC and DC line interruption – Values for t1s, t2, t2c indicated in the table are referred to brake set at maximum torque, medium air gap and rated voltage
W_{max} = max energy per brake operation
W = dissipatable braking energy before replacement of brake disc
P_b = brake power absorption at 20 °C
M_b = static braking torque (±15%)
s/h = starts per hour

The brake pad wear depends on the operating/ambient conditions (temperature, humidity, angular speed, specifica pressure); Therefore the declared wear rate must be considered as indicative.

M7.4 AFD brake connections

On standard single-pole motors, the rectifier is connected to the motor terminal board at the factory. For switch-pole motors and where a separate brake power supply is required, connection to rectifier must comply with brake voltage VB stated in motor name plate.
Because the load is of the inductive type, brake control and DC line interruption must use contacts from the usage class AC-3 to IEC 60947-4-1.

Table (F41) – Brake power supply from motor terminals and AC line interruption
Delayed stop time t_2 and function of motor time constants.
Mandatory when soft-start/stops are required.
Table (F42) – Brake coil with separate power supply and AC line interruption
Normal stop time independent of motor.
Achieved stop times t_2 are indicated in the table (F40).
Table (F43) – Brake coil power supply from motor terminals and AC/DC line interruption.
Quick stop with operation times t_{2c} as per table (F40).
Table (F44) – Brake coil with separate power supply and AC/DC line interruption.
Stop time decreases by values t_{2c} indicated in the table (F40).

The brake may be voltage supplied directly from the motor terminal box (from tab. F41 to tab. F44) only if the nominal voltage of the brake is the same as the smaller voltage of the motor.

(F 41)

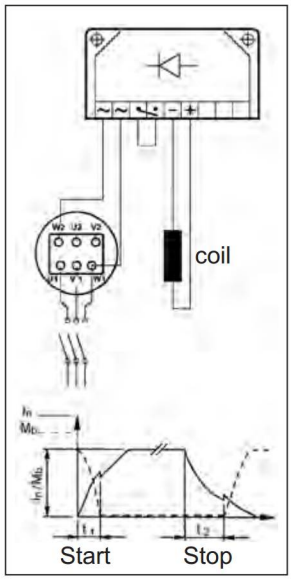

(F 42)

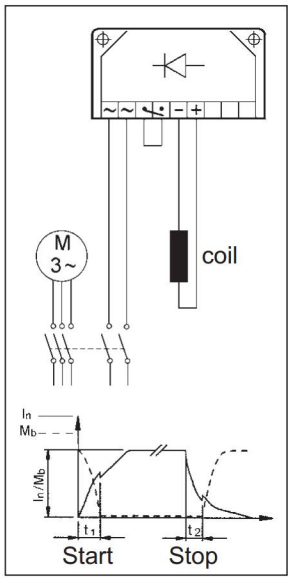

(F 43)

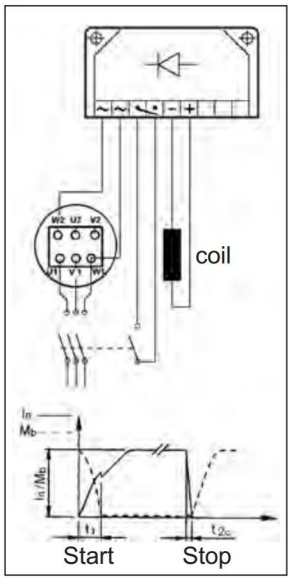

(F 44)

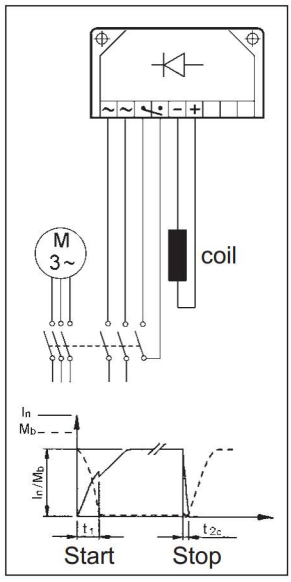

M8 AC BRAKE MOTORS TYPE BN_FA and M_FA

Frame sizes: BN 63 … BN 180M / M05 ... M5

(F 45)

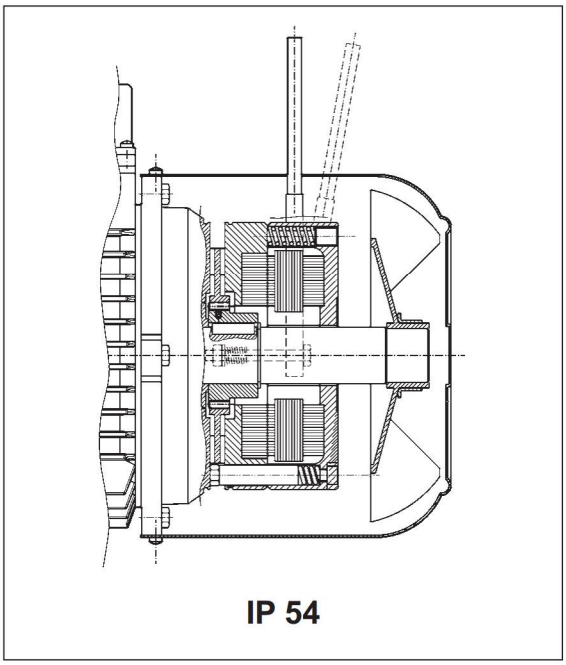

IP 54

(F 46)

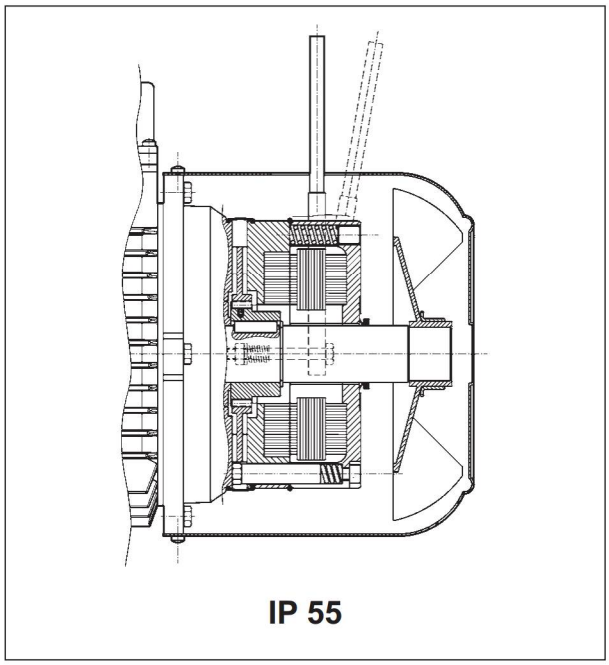

IP 55

Electromagnetic brake operates from three-phase **alternated current** power supply and is bolted onto conveyor shield. Preloading springs provide axial positioning of magnet body.
Steel brake disc slides axially on steel hub shrunk onto motor shaft with anti-vibration device.
Brake torque factory setting is indicated in the corresponding motor rating charts.
Spring preloading screws provide stepless braking torque adjustment.
Torque adjustment range is 30% $M_{bMAX} < M_b < M_{bMAX}$ (where M_{bMAX} is maximum braking torque as shown in tab. (F48).
Thanks to their high dynamic characteristics, FA brakes are ideal for heavy-duty applications as well as applications requiring frequent stop/starts and very fast response time.
Motors may be equipped with manual release lever with automatic return (**R**) at request. See variant at paragraph “BRAKE RELEASE SYSTEMS” for available release lever locations.
For applications involving lifting and/or high hourly energy dissipation, contact Bonfiglioli’s Technical Service.

M8.1 Degree of protection

Standard protection class is IP54.
Brake motor BN_FA is also available in protection class **IP55**, which mandates the following variants:

- V-ring at N.D.E. of motor shaft
- rubber protection sleeve
- O-ring



M8.2 FA brake power supply

In single speed motors, power supply is brought to the brake coil direct from the motor terminal box. As a result, brake voltage and motor voltage are the same. In this case, brake voltage indication may be omitted in the designation.
Switch-pole motors and motors with separate brake power supply feature an auxiliary terminal board with 6 terminals for connection to brake line. In both cases, brake voltage indication in the designation is mandatory.
The following table reports standard AC brake power supply ratings for single- and switch-pole motors:

(F 47)

	BN 63…BN 132	BN 160…BN 180
single-pole motor	**M05...M4LB**	**M4LC...M5**
	230Δ / 400Y V ±10% – 50 Hz	400Δ/ 690Y V ±10% – 50 Hz
	265Δ / 460Y ±10% - 60 Hz	460Y – 60 Hz

	BN 63…BN 132
switch-pole motors (separate power supply line)	**M05...M4**
	230Δ / 400Y V ±10% – 50 Hz
	460Y - 60 Hz

Unless otherwise specified, standard brake power supply is 230Δ /400Y V - 50 Hz.

Special voltages in the 24…690 V, 50-60 Hz range are available at request.

M8.3 Technical specifications of FA brakes

(F 48)

Brake	Brake torque M_b [Nm]	Release t_1 [ms]	Braking t_2 [ms]	W_{max} [J]			W [MJ]	P [VA]
				10 s/h	100 s/h	1000 s/h		
FA 02	3.5	4	20	4500	1400	180	15	60
FA 03	7.5	4	40	7000	1900	230	25	80
FA 04	15	6	60	10000	3100	350	30	110
FA 14								
FA 05	40	8	90	18000	4500	500	50	250
FA 15								
FA 06S	60	16	120	20000	4800	550	70	470
FA 06	75	16	140	29000	7400	800	80	550
FA 07	150	16	180	40000	9300	1000	130	600
FA 08	250	20	200	60000	14000	1500	230	1200

M_b = max static braking torque (±15%)
t_1 = brake release time
t_2 = brake engagement time
W_{max} = max energy per brake operation (brake thermal capacity)
W = braking energy between two successive air gap adjustments
P_b = power drawn by brake at 20° (50 Hz)
s/h = starts per hour

NOTE
Values t_1 and t_2 in the table refer to a brake set at rated torque, medium air gap and rated voltage.

The brake pad wear depends on the operating/ambient conditions (temperature, humidity, angular speed, specifica pressure); Therefore the declared wear rate must be considered as indicative.

M8.4 FA brake connections

The diagram (F49) shows the wiring when brake is connected directly to same power supply of the motor:

(F 49)

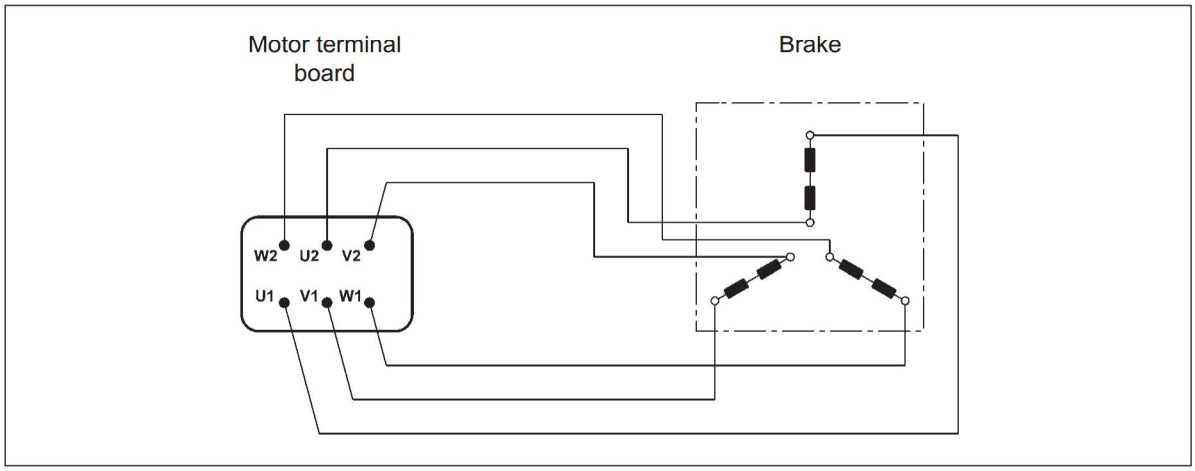

Switch-pole motors and, at request, single-pole motors with separate power supply are equipped with an auxiliary terminal board with 6 terminals for brake connection.
In this version, motors feature a larger terminal box. See diagram (F50):

(F 50)

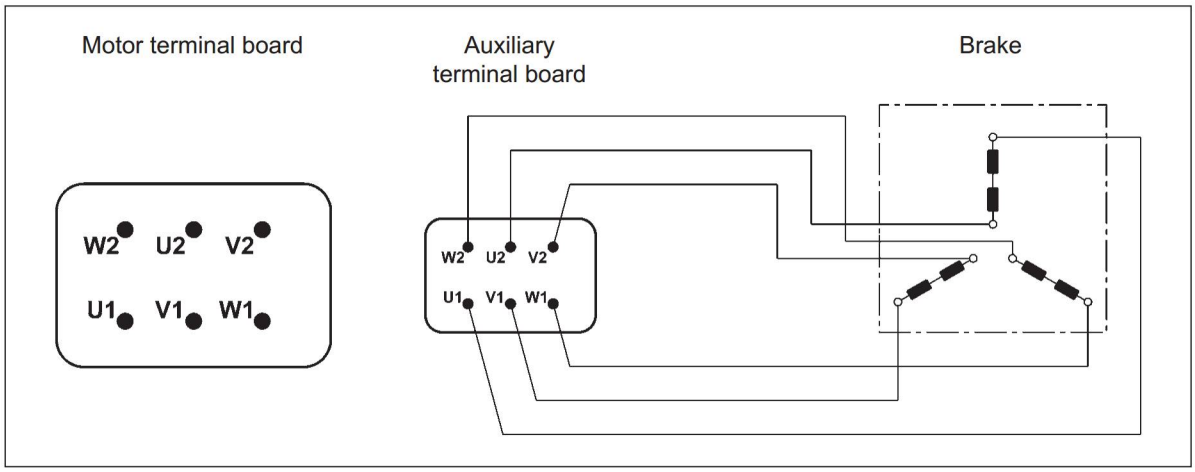

M9 BRAKE RELEASE SYSTEMS

Spring-applied brakes type FD, AFD and FA may be equipped with optional manual release devices. These are typically used for manually releasing the brake before servicing any machine or plant parts operated by the motor.

R

(F 51)

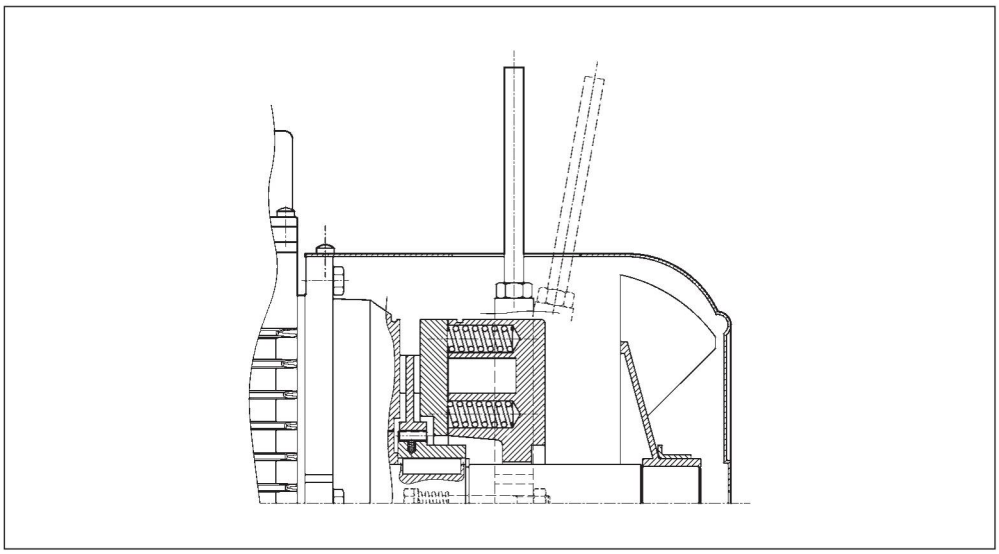

A return spring brings the release lever back in the original position.

RM

(F 52)

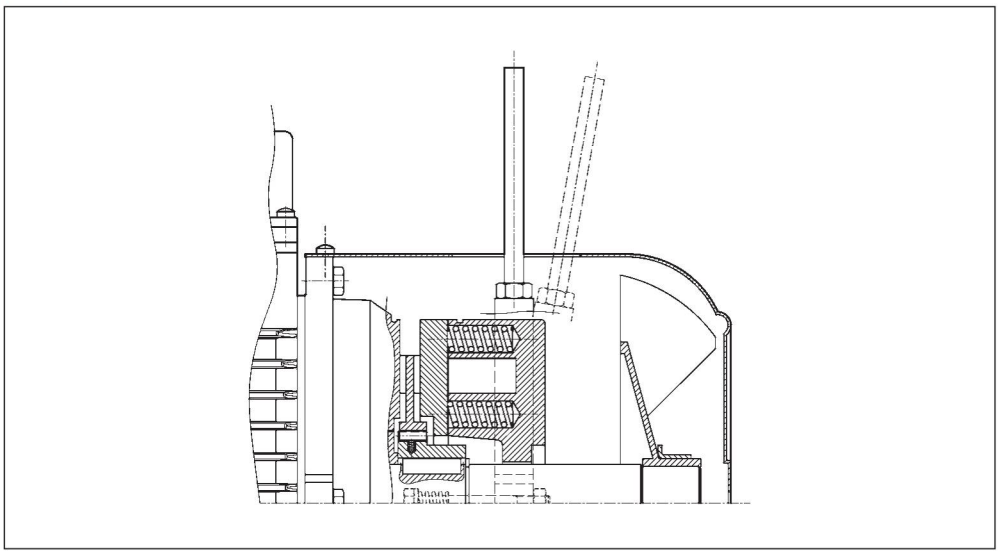

On motors type BN_FD, if the option RM is specified, the release device may be locked in the ”release” position by tightening the lever until its end becomes engaged with a brake housing projection. The availability for the various disengagement devices is charted here below:

(F 53)

	R	RM
BN_FD	BN 63...BN 200	2p 63A2 ≤ H ≤ 132M2 4p 63A4 ≤ H ≤ 132MA4 6p 63A6 ≤ H ≤ 132MA6
BN_AFD	BN 63...BN 160MR	⛔
M_FD	M 05...M 5	M 05...M 4LA
M_AFD	M 05...M 4LC	⛔
BN_FA	BN 63...BN 180M	⛔
M_FA	M 05...M 5	

M9.1 Release lever orientation

Unless otherwise specified, the release lever is located 90° away from the terminal box – identified by letters [**AB**] in the diagram below – in a clockwise direction on both options **R** and **RM**. Alternative lever positions [**AA**], [**AC**] and [**AD**] are also possible when the corresponding option is specified:

(F 54)

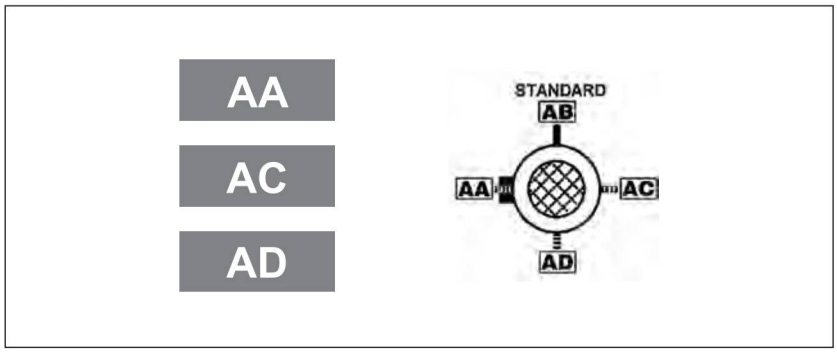

M9.2 Fly-wheel data (F1)

The table below shows values of weight and inertia of flywheel (option F1). Overall dimensions of motors remain unchanged.

(F 55)

Main data for flywheel of motore type: BN_FD, BN_AFD, M_FD, M_AFD			
		**Fly-wheel weight** [Kg]	**Fly-wheel inertia** [Kgm²]
BN 63	**M05**	0.69	0.00063
BN 71	**M1**	1.13	0.00135
BN 80	**M2**	1.67	0.00270
BN 90 S - BN 90 L	**–**	2.51	0.00530
BN 100	**M3**	3.48	0.00840
BN 112	**–**	4.82	0.01483
BN 132 S - BN 132 M	**M4**	6.19	0.02580



M10 OPTIONS

M10.1 Thermal protective devices

n addition to the standard protection provided by the magneto-thermal device, motors can be supplied with built-in thermal probes to protect the winding against overheating caused, by insufficient ventilation or by an intermittent duty.
This additional protection should always be specified for servoven- tilated motors (IC416).

M10.2 Capacitive filter

CF

An optional capacitive filter is available for DC brake motors type BN_FD and BN_AFD only. When the suitable capacitive filter is installed upstream of the rectifier (option CF), motors comply with the emission limits required by standard EN61000-6-3:2007“ Electromagnetic Compatibility – Generic Emission Standard – Part 6-3: Residential, commercial and light industrial environment”.

M10.3 Thermistors

E3

These are semi-conductors having rapid resistance variation when they are close to the rated switch off temperature (150 °C).
Variations of the R = f(T) characteristic are specified under DIN 44081, IEC 34-11 Standards.
Positive temperature coefficient thermistors are normally used (also known as PTC “cold conductor resistors”).
Thermistors cannot control relays directly and must be connected to a suitable disconnect device.
Thus protected, three PTCs connected in series are installed in the winding, the terminals of which are located on the auxiliary terminal-board.

K1

The design characteristics of this sub-group of PTC thermistors allow them to be used as positive temperature coefficient sensors with variable resistance.
Functioning temperature range: 0°C ... +260°C.
Thermistors cannot control relays directly and must be connected to a suitable disconnect device.
Terminals (polarised) for 1 x KTY 84-130 are provided on an auxiliary terminal strip.

M10.4 Bimetallic thermostates

D3

These types of protective devices house a bimetal disk. When the rated switch off temperature (150 °C) is reached, the disk switches the contacts from their initial rest position.
As temperature falls, the disk and the contacts automatically return to rest position.
Three bimetallic thermostates connected in series are usually employed, with normally closed contacts. The terminals are located on an auxiliary terminal-board.

M10.5 Plug connector

CON

Three types of connectors (CON 1, CON 2, CON 3) are provided; they can be mounted in two different positions: right side of terminal box cover (C1D, C2D, C3D); left side of terminal box cover (C1S, C2S, C3S).
The option CON is applicable to single speed BN and M motors (2, 4, 6, 8 poles), and it is not applicable to switch-pole motors. More details about the motor sizes are available in the next table.
The connectors CON 1 / CON 2 are available for BN and M motors without brake and for BN and M brakemotors equipped with DC brake type FD or AFD, for the motor sizes listed below.
The male connector (with pins) is mounted on the motor, the female connector is not provided. With CON option, the winding connection is always Y.
With option U1 “forced ventilation”, the fan unit supply is available inside the separate terminal box fixed to fan cover.
With options EN1...EN6, the encoder connection is made by a cable not connected to the motor plug connector.
The CON option is not applicable to brakemotors equipped with AC brake type FA. The CON option is not available when at least one of the next options are selected: the U2, CUS, IC.

Specifications

(F 56)

Option	**CON 1**
Motor size	**BN63…BN112 / M05...M3**
Connector view	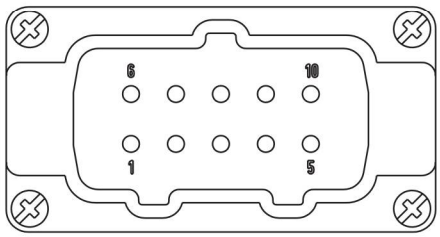
Type of connector	Harting Han 10ES
Housing	Han EMC 10B with 2 levers
Numbers of pins - nominal current	10 x 16A
Voltage	500 Vac
Contact connection	Screw terminals

(F 57)

Option	**CON 2**
Motor size	**BN63…BN132M / M05...M4L**
Connector view	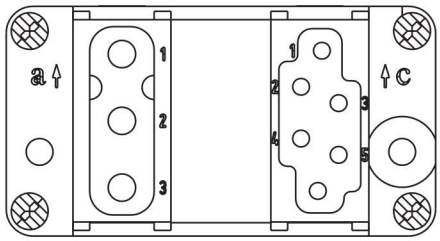
Type of connector	Harting Han Modular
Housing	Han EMC 10B with 2 levers
Module type	Module C + Empty module + Module E
Numbers of pins - nominal current	3 x 36A / 6 x 16A
Voltage	500 Vac
Contact connection	Crimping contacts

(F 58)

Option	**CON 3**
Motor size	**BN63…BN132M / M05...M4L**
Connector view	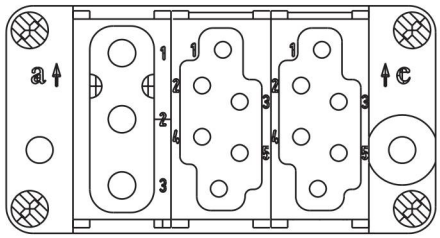
Type of connector	Harting Han Modular
Housing	Han EMC 10B with 2 levers
Module type	Module C + Module E + Module E
Numbers of pins - nominal current	3 x 36A / 6 + 6 x 16A
Voltage	500 Vac
Contact connection	Crimping contacts

(F 59)

Connector orientation

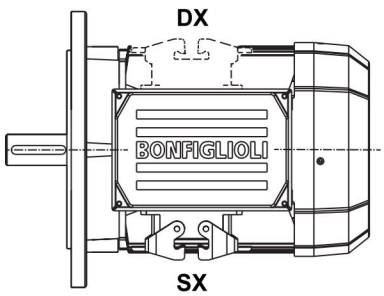

(F 60)

Motors without brake dimensions

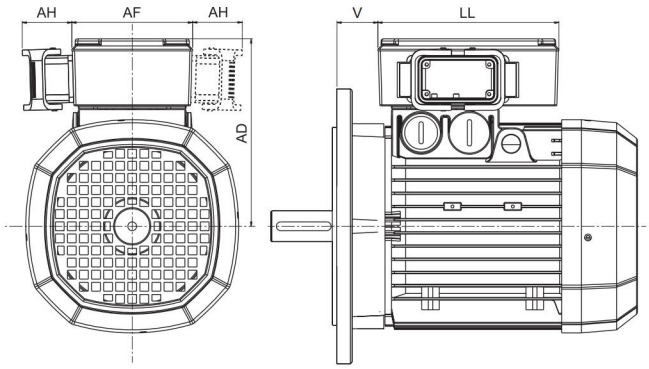

		AD (mm)	AF (mm)	AH (mm)	LL (mm)	V(*) (mm)
BN63	**M05**	136	110	45	165	4.5
BN71	**M1**	149	110	45	165	15.5
BN80	**M2**	160	110	45	165	16.5
BN90	**—**	162	110	45	165	31.5
BN100	**M3**	171	110	45	165	37.5
BN112	**—**	186	110	45	165	39
BN132	**M4**	210	140	45	188	45.5
BN160MR	**—**	210	140	45	188	161

(*) Dimension valid only for motors BN.

(F 61)

Motors with FD brake dimensions

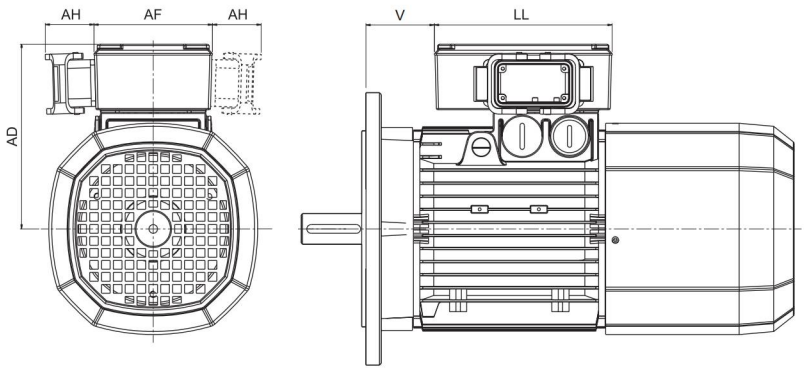

		AD (mm)	AF (mm)	AH (mm)	LL (mm)	V(*) (mm)
BN63	**M05**	136	110	45	165	4.5
BN71	**M1**	149	110	45	165	1.5
BN80	**M2**	160	110	45	165	18.5
BN90	**—**	162	110	45	165	39.5
BN100	**M3**	171	110	45	165	63.5
BN112	**—**	186	110	45	165	75
BN132	**M4**	210	140	45	188	122
BN160MR	**—**	210	140	45	188	161

(*) Dimension valid only for motors BN.

M10.6 Control of brake operation

MSW

The microswitch can be set in order to obtain from it a signal related to the attraction/release of anchor plate, or it can be set in order to give feedback when the air gap reaches the maximum value.
MSW option is available for brakes FD03...FD09 and AFD03...AFD07.
The microswitch is provided with three lead wires (NC, NO, COM). The next figure shown the main components of the brake equipped with microswitch.

(F 62)

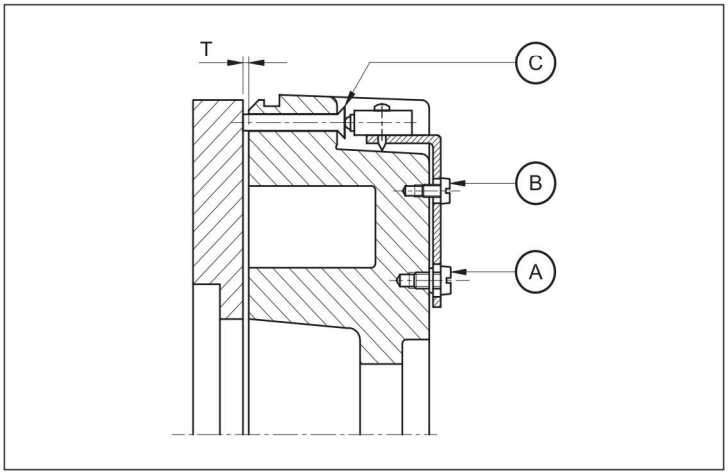

A: Plate fixing screws
B: Setting screws
C: Actuator control pin

M10.7 Additional cable entry for brakemotors

IC

The terminal box cover of brakemotors BN63...BN160MR / M05...M4 is provided with two additional cable entry M16 x 1.5 (one cable entry per side).
The terminal box cover of brakemotors BN160...BN200 / M5 is provided with an additional cable entry M16 x 1.5 next to the cable entry used for the brake.

M10.8 Anti-condensation heaters

H1 **NH1**

Where an application involves high humidity or extreme temperature fluctuation, motors may be equipped with an anti-condensate heater.
A single-phase power supply is available in the auxiliary terminal board inside the main terminal box.
Values for the absorbed power are listed here below:

(F 63)

		H1 1~ 230V ± 10% P [W]	NH1 1~ 115V ± 10% P [W]
BN 56...BN 80	**M0...M2**	10	10
BN 90...BN 160MR	**M3 - M4**	25	25
BN 160M...BN 180M	**M5**	50	50
BN 180L...BN 200L	—		

Warning!
Always remove power supply to the anti-condensante hea- ter before operating the motor.

M10.9 Tropicalization

TP

When option **TP** is specified, motor windings receive additional protection for operation in high humidity and temperature conditions.

M10.10 Second shaft extension

PS

This option is not compatible with variants RC, TC, U1, U2, EN1, EN2, EN3, EN4, EN5, EN6.
For shaft dimensions please see motor dimensions tables.

(F 64)

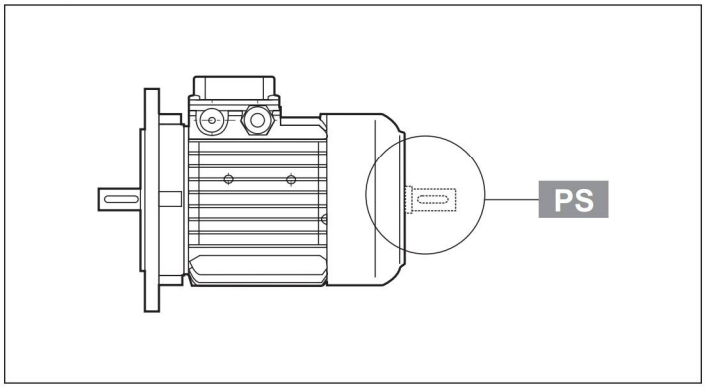

M10.11 Backstop device

AL **AR**

For applications where backdriving must be avoided, motors equipped with an anti run-back device can be used (available for the M series only). While allowing rotation in the direction required, this device operates instantaneously in case of a power failure, preventing the shaft from running back. The anti run-back device is life lubricated with special grease for this specific application. When ordering, customers should indicate the required rotation direction, AL or AR.
Never use the anti run-back device to prevent reverse rotation caused by faulty electrical connection. Table (F70) shows rated and maximum locking torques for the anti run-back devices. A diagram of the device can be seen in Table (F71). Overall dimensis are same as the corresponding brake motor. The direction of free rotation is described in the “MOTOR OPTIONS” section of specifically dedicated sections to gear units.

(F 65)

	Rated locking torque [Nm]	Max. locking torque [Nm]	Release speed [min^{-1}]
M1	6	10	750
M2	16	27	650
M3	54	92	520
M4	110	205	430

(F 66)

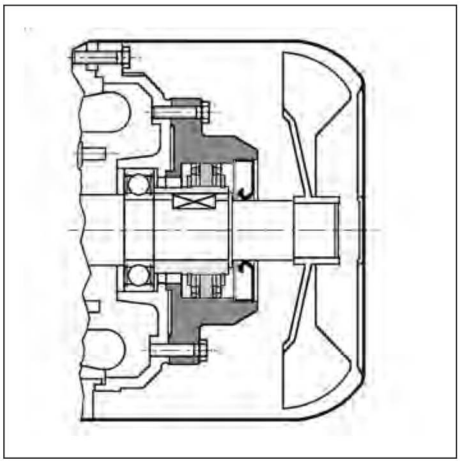

M10.12 Ventilation

Motors are cooled through outer air blow (IC 411 according to CEI EN 60034-6) and are equipped with a plastic radial fan, which operates in both directions.
Ensure that fan cover is installed at a suitable distance from the closest wall so to allow air circulation and servicing of motor and brake, if fitted.
On request, motors can be supplied with independently power-supplied forced ventilation system starting from BN 71 or M1 size.
Motor is cooled by an axial fan with independent power supply and fitted on the fan cover (IC 416 cooling system).
This version is used in case of motor driven by inverter so that steady torque operation is possible even at low speed or when high starting frequencies are needed.
Brake all motors with rear shaft projection (PS option) are excluded.

(F 67)

Power supply					
		V a.c. ± 10%	**Hz**	**P** [W]	**I** [A]
BN 71	**M1**	1~ 230	50 / 60	22	0.12
BN 80	**M2**			22	0.12
BN 90	**—**			40	0.30
BN 100 (*)	**M3**			50	0.25
BN 112	**—**	3~ 230 Δ / 400Y		50	0.26 / 0.15
BN 132S	**M4S**			110	0.38 / 0.22
BN 132M...BN 160MR	**M4L**				
BN 160...BN 180M	**M5**		50	180	1.25 / 0.72

This variant has two different models, called **U1** and **U2**, having the same longitudinal size. Longer side of fan cover (**DL**) is specified for both models in the table below. Overall dimension can be reckoned from motor size table.

(F 68)

Extra length for servoventilated motors			
		ΔL_1	ΔL_2
BN 71	**M1**	93	32
BN 80	**M2**	127	55
BN 90	**—**	131	48
BN 100	**M3**	119	28
BN 112	**—**	130	31
BN 132S	**M4S**	161	51
BN 132M	**M4L**	161	51

ΔL_1 = extra length to LB value of corresponding standard motor

ΔL_2 = extra length to LB value of corresponding brake motor

U1

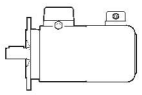

Fan wiring terminals are housed in a separate terminal box.
In brake motors of size BN 71...BN 160MR, M1...M4L, with **U1** model, the release lever cannot be positioned to AA.
The option is not applicable to motors compliant with the CSA and UL norms (option CUS).

U2

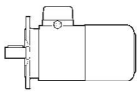

Fan terminals are wired in the motor terminal box.
The **U2** option does not apply to motors BN 160 through BN 200L, M5, with the only exception of motor BN 160MR for which the option is available instead and to motors with option CUS (ompliant to norms CSA and UL).

(F 69)

(*)			**V a.c. ± 10%**	**Hz**	**P** [W]	**I** [A]
	BN 100_U2	**M3**	3~ 230 Δ / 400Y	50 / 60	40	0.12 / 0.09

M10.13 Rain canopy

RC

The rain canopy protects the motor from dripping and avoids the ingress of solid bodies. It is recommended when motor is installed in a vertical position with the shaft downwards.
Relevant dimensions are indicated in the table below.
The drip cover is not compatible with variants PS, EN1, EN2, EN3, EN4, EN5, EN6.

(F 70)

		AQ	ΔV	
BN 63	**M05**	118	24	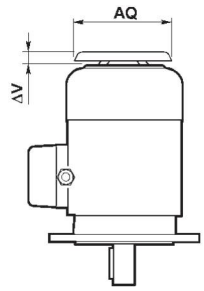
BN 71	**M1**	134	27	
BN 80	**M2**	152	25	
BN 90	**—**	168	30	
BN 100	**M3**	190	28	
BN 112	**—**	211	32	
BN 132...BN 160MR	**M4**	254	32	
BN 160M...BN 180M	**M5**	302	36	
BN 180L...BN 200L	**—**	340	36	

M10.14 Textile canopy

TC

Option TC is a cover variant for textile industry environments, where lint may obstruct the fan grid and prevent a regular flow of cooling air.
This option is not compatible with variants EN1, EN2, EN3, EN4, EN5, EN6.
Overall dimensions are the same as drip cover type RC.

M10.15 Feedback units

Motors may be combined with six different types of encoders to achieve feedback circuits.
Configurations with double-extended shaft (PS) and rain canopy (RC, TC) are not compatible with encoder installation.

EN1

Incremental encoder, V_{IN} = 5 V, line-driver output RS 422.

EN2

Incremental encoder, V_{IN} = 10-30 V, line-driver output RS 422.

EN3

Incremental encoder, V_{IN} = 12-30 V, push-pull output 12-30 V

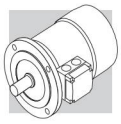

EN4

Encoder sin/cos, V_{IN} = 4.5-5.5 V, output Sinus 0.5V_{PP}.

EN5

Absolute encoder singleturn, HIPERFACE® interface, V_{IN} = 7-12 V.

EN6

Absolute encoder multiturn, HIPERFACE® interface, V_{IN} = 7-12 V.

(F 71)

	EN1	EN2	EN3	EN4	EN5	EN6
Interface	TTL/RS 422	TTL/RS 422	HTL/push-pull	Sinus 0.5 VPP	HIPERFACE®	HIPERFACE®
Power supply voltage [V]	4...6	10...30	12...30	4.4...5.5	7...12	7...12
Output voltage [V]	5	5	12...30	—	—	—
No-load operating current [mA]	120	100	100	40	80	80
No. of pulses per revolution	1024					
Steps per revolution	—	—	—	—	15 bit	15 bit
Revolutions	—	—	—	—	—	12 bit
No. of signals	6 (A, B, Z + inverted signals)			6 (cos-, cos+, sin-, sin+, Z, $\overline{Z}$)	—	—
Max. output frequency [kHz]	600			200		
Max. speed [min^{-1}]	6000 (9000 min^{-1} for 10 s)					
Working temperature range [°C]	-30 ... +100					
Protection class	IP 65					

(F 73)

EN1, EN2, EN3, EN4, EN5, EN6	
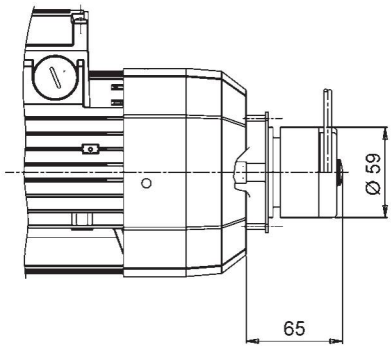	
BN 63...BN 200L	**M05...M5**
BN 63_FD...BN 200L_FD	**M05_FD...M5_FD**
BN 63_AFD...BN 160MR_AFD	**M05_AFD...M4LC_AFD**
BN 63_FA...BN 200L_FA	**M05_FA...M5_FA**

(F 72)

EN_ + U1		
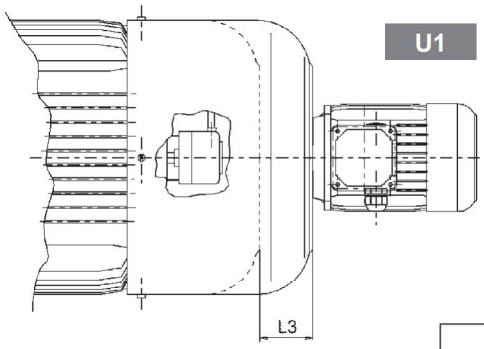		
		L3
BN 160M...BN 180M	**M5**	72
BN 180L...BN 200L	**-**	82
BN 160M_FD...BN 180M_FD	**M5_FD**	35
BN 180L_FD...BN 200L_FD	**-**	41

If the encoder device (option EN_) is specified on motors BN71...BN160MR / M1...M4, along with the independent fan cooling (options U1, U2), the extra length of motor is coincident with that of the correspondent U1 and U2 execution.

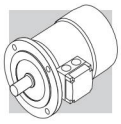

M10.16 Surface protection

C_

When no specific protection class is requested, the painted (ferrous) surfaces of motors are protected to at least corrosivity class C2 (UNI EN ISO 12944-2). For improved resistance to atmospheric corrosion, motors can be delivered with C3 and C4 surface protection.

SURFACE PROTECTION	Typical environments	Maximum surface temperature	Corrosivity class according to UNI EN ISO 12944-2
C3	Urban and industrial environments with up to 100% relative humidity (medium air pollution)	120°C	C3
C4	Industrial areas, coastal areas, chemical plant, with up to 100% relative humidity (high air pollution)	120°C	C4

Motors with optional protection to class C3 or C4 are available in a choice of colours. If no specific colour is requested (see the “PAINTING” option) motors are finished in RAL 7042.
Motors can also be supplied with surface protection for corrosivity class C5 according to UNI EN ISO 12944-2. Contact our Technical Service for further details.

M10.17 Painting

RAL_

Gearboxes with optional protection to class C3 or C4 are available in the colours listed in the following table.

PAINTING	Colour	RAL number
RAL7042*	Traffic Grey A	7042
RAL5010	Gentian Blue	5010
RAL9005	Jet Black	9005
RAL9006	White Aluminium	9006
RAL9010	Pure White	9010

* Gearboxes are supplied in this standard colour if no other colour is specified.

NOTE – “PAINTING” options can only be specified in conjunction with “SURFACE PROTECTION” options.



M10.18 Certificates

ACM

Certificate of compliance of motors

The document certifies the compliance of the product with the purchase order and the construction in conformity with the applicable procedures of the Bonfiglioli Quality System.

CC

Inspection certificate

The document entails checking on order compliance, the visual inspection of external conditions and instrumental testing of the electrical characteristics in unloaded conditions. Units inspected are sampled within the shipping batch and marked individually.



2P — 3000 min^{-1} - S1 — 50 Hz

															d.c. brake						c.c. brake with fixed air gap						a.c. brake				
															FD						AFD						FA				
P_n		n	M_n	IE1	η (100%)	η (75%)	η (50%)	cosφ	In 400V	Is / In	Ms / Mn	Ma / Mn	J_m x 10^{-4}	IM B5	Mod	Mb	Z_o 1/h		J_m x 10^{-4}	IM B5	Mod	Mb	Z_o 1/h	J_m x 10^{-4}	IM B5	Mod	Mb	Z_o 1/h	J_m x 10^{-4}	IM B5
kW		min^{-1}	Nm		%	%	%		A				kgm^2	Kg		Nm	NB	SB	kgm^2	Kg		Nm	SB	kgm^2	Kg		Nm		kgm^2	Kg
0.18	**BN 63A 2**	2730	0.63	○	59.9	56.9	51.9	0.77	0.56	3.0	2.1	2.0	2.0	3.5	**FD 02**	1.75	3900	4800	2.6	5.2	**AFD 02**	1.75	4800	2.6	5.0	**FA 02**	1.75	4800	2.6	5.0
0.25	**BN 63B 2**	2740	0.87	○	66.0	64.8	64.8	0.76	0.72	3.3	2.3	2.3	2.3	3.9	**FD 02**	1.75	3900	4800	3.0	5.6	**AFD 02**	1.75	4800	3.0	5.4	**FA 02**	1.75	4800	3.0	5.4
0.37	**BN 63C 2**	2800	1.26	○	69.1	66.8	66.8	0.78	0.99	3.9	2.6	2.6	3.3	5.1	**FD 02**	3.5	3600	4500	3.9	6.8	**AFD 02**	3.5	4500	3.9	6.6	**FA 02**	3.5	4500	3.9	6.6
0.37	**BN 71A 2**	2820	1.25	○	73.8	73.0	70.6	0.76	0.95	4.8	2.8	2.6	3.5	5.4	**FD 03**	3.5	3000	4100	4.6	8.1	**AFD 03**	5	4100	4.6	7.8	**FA 03**	3.5	4200	4.6	7.8
0.55	**BN 71B 2**	2820	1.86	○	76.0	75.8	74.8	0.76	1.37	5.0	2.9	2.8	4.1	6.2	**FD 03**	5	2900	4200	5.3	8.9	**AFD 03**	5	4200	5.3	8.6	**FA 03**	5	4200	5.3	8.6
0.75	**BN 71C 2**	2810	2.6	○	76.6	76.2	76.2	0.76	1.86	5.1	3.1	2.8	5.0	7.3	**FD 03**	5	1900	3300	6.1	10.0	**AFD 03**	7.5	3300	6.1	9.7	**FA 03**	5	3600	6.1	9.7
0.75	**BN 80A 2**	2810	2.6	•	76.2	75.5	68.3	0.81	1.75	4.8	2.6	2.2	7.8	8.6	**FD 04**	5	1700	3200	9.4	12.5	**AFD 04**	5	3200	9.4	12.1	**FA 04**	5	3200	9.4	12.4
1.1	**BN 80B 2**	2800	3.8	•	76.4	76.2	75.0	0.81	2.57	4.8	2.8	2.4	9.0	9.5	**FD 04**	10	1500	3000	10.6	13.4	**AFD 04**	10	3000	10.6	13.0	**FA 04**	10	3000	10.6	13.3
1.5	**BN 80C 2**	2800	5.1	•	79.1	79.5	77.2	0.81	3.4	4.9	2.7	2.4	11.4	11.3	**FD 04**	15	1300	2600	13.0	15.2	**AFD 04**	15	2600	13.0	14.8	**FA 04**	15	2600	13.0	15.1
1.5	**BN 90SA 2**	2870	5.0	•	82.0	81.5	78.1	0.80	3.4	5.9	2.7	2.6	12.5	12.3	**FD 14**	15	900	2200	14.1	16.5	**AFD 14**	15	2200	14.1	16.1	**FA 14**	15	2200	14.1	16.4
1.85	**BN 90SB 2**	2880	6.1	•	82.5	82.0	75.4	0.80	4.0	6.2	2.9	2.6	16.7	14	**FD 14**	15	900	2200	18.3	18.2	**AFD 14**	15	2200	18.3	17.8	**FA 14**	15	2200	18.3	18.1
2.2	**BN 90L 2**	2880	7.3	•	82.7	82.1	80.8	0.80	4.8	6.3	2.9	2.7	16.7	14	**FD 05**	26	900	2200	21	20	**AFD 05**	26	2200	21	19.4	**FA 05**	26	2200	21	20.7
3	**BN 100L 2**	2860	10.0	•	81.5	81.3	77.4	0.79	6.7	5.6	2.6	2.2	31	20	**FD 15**	26	700	1600	35	26	**AFD 15**	26	1600	35	25	**FA 15**	26	1600	35	27
4	**BN 100LB 2**	2870	13.3	•	83.1	83.0	77.8	0.80	8.7	5.8	2.7	2.5	39	23	**FD 15**	40	450	900	43	29	**AFD 15**	40	900	43	28	**FA 15**	40	1000	43	30
4	**BN 112M 2**	2900	13.2	•	85.5	84.5	83.0	0.82	8.2	6.9	3.0	2.9	57	28	**FD 06S**	40	—	950	66	39	**AFD 06S**	40	950	66	38	**FA 06S**	40	950	66	40
5.5	**BN 132SA 2**	2890	18.2	•	84.7	84.5	81.2	0.84	11.2	5.9	2.6	2.2	101	35	**FD 06**	50	—	600	112	48	**AFD 06**	62	600	112	47	**FA 06**	50	600	112	49
7.5	**BN 132SB 2**	2900	25	•	86.5	86.3	84.4	0.85	14.7	6.4	2.6	2.2	145	42	**FD 06**	50	—	550	154	55	**AFD 06**	62	550	154	54	**FA 06**	50	550	154	56
9.2	**BN 132M 2**	2930	30	•	87.0	86.5	83.6	0.86	17.7	6.7	2.8	2.3	178	53	**FD 56**	75	—	430	189	66	**AFD 06**	75	430	189	65	**FA 06**	75	430	189	67
11	**BN 160MR 2**	2920	36	•	87.6	87.0	86.0	0.88	20.6	6.9	2.9	2.5	210	65																
15	**BN 160MB 2**	2930	49	•	89.6	89.4	88.0	0.86	28.1	7.1	2.6	2.3	340	84																
18.5	**BN 160L 2**	2930	60	•	90.4	90.1	89.0	0.86	34	7.6	2.7	2.3	420	97																
22	**BN 180M 2**	2930	72	•	89.9	89.7	89.5	0.88	40	7.8	2.6	2.4	490	109																
30	**BN 200LA 2**	2930	98	•	90.7	90.1	87.6	0.89	54	7.8	2.7	2.9	770	140																

○ = n.a. • = IE1

4P — 1500 min^{-1} - S1 — 50 Hz

															d.c. brake						c.c. brake with fixed air gap					a.c. brake				
															FD						AFD					FA				
P_n		n	M_n	IE1	η (100%)	η (75%)	η (50%)	cosφ	In 400V	Is/In	Ms/Mn	Ma/Mn	J_m x 10^{-4}	IM B5	Mod	Mb	Z_o 1/h		J_m x 10^{-4}	IM B5	Mod	Mb	Z_o 1/h	J_m x 10^{-4}	IM B5	Mod	Mb	Z_o 1/h	J_m x 10^{-4}	IM B5
kW		min^{-1}	Nm		%	%	%		A				kgm^2	Kg		Nm	NB	SB	kgm^2	Kg		Nm	SB	kgm^2	Kg		Nm		kgm^2	Kg
0.06	**BN 56A 4**	1340	0.43	○	46.8	44.2	41.3	0.65	0.28	2.6	2.3	2.0	1.5	3.1																
0.09	**BN 56B 4**	1350	0.64	○	51.7	47.6	42.9	0.60	0.42	2.6	2.5	2.4	1.5	3.1																
0.12	**BN 63A 4**	1350	0.85	○	59.8	56.2	47.0	0.62	0.47	2.6	1.9	1.8	2.0	3.5	**FD 02**	1.75	10000	13000	2.6	5.2	**AFD 02**	1.75	13000	2.6	5.0	**FA 02**	1.75	13000	2.6	5.0
0.18	**BN 63B 4**	1320	1.30	○	54.8	52.9	52.5	0.67	0.71	2.6	2.2	2.0	2.3	3.9	**FD 02**	3.5	10000	13000	3.0	5.6	**AFD 02**	3.5	13000	3.0	5.4	**FA 02**	3.5	13000	3.0	5.4
0.25	**BN 63C 4**	1340	1.78	○	65.3	65.0	57.9	0.69	0.80	2.7	2.1	1.9	3.3	5.1	**FD 02**	3.5	7800	10000	3.9	6.8	**AFD 02**	3.5	10000	3.9	6.6	**FA 02**	3.5	10000	3.9	6.6
0.25	**BN 71A 4**	1380	1.73	○	63.7	62.2	59.1	0.73	0.78	3.3	1.9	1.7	5.8	5.1	**FD 03**	3.5	7700	11000	6.9	7.8	**AFD 03**	5	11000	6.9	7.5	**FA 03**	3.5	11000	6.9	7.5
0.37	**BN 71B 4**	1370	2.6	○	66.8	66.7	63.0	0.76	1.05	3.7	2.0	1.9	6.9	5.9	**FD 03**	5	6000	9400	8.0	8.6	**AFD 03**	5	9400	8.0	8.3	**FA 03**	5.0	9400	8.0	8.3
0.55	**BN 71C 4**	1380	3.8	○	69.0	68.9	68.8	0.74	1.55	4.1	2.3	2.3	9.1	7.3	**FD 53**	7.5	4300	8700	10.2	10.0	**AFD 03**	7.5	8700	10.2	9.7	**FA 03**	7.5	8700	10.2	9.7
0.55	**BN 80A 4**	1390	3.8	○	72.0	71.3	69.7	0.77	1.43	4.1	2.3	2.0	15	8.2	**FD 04**	10	4100	8000	16.6	12.1	**AFD 04**	10	8000	16.6	11.7	**FA 04**	10	8000	16.6	12.0
0.75	**BN 80B 4**	1400	5.1	•	75.0	74.5	69.3	0.78	1.85	4.9	2.7	2.5	20	9.9	**FD 04**	15	4100	7800	22	13.8	**AFD 04**	15	7800	22	13.4	**FA 04**	15	7800	22	13.7
1.1	**BN 80C 4**	1400	7.5	•	75.5	76.2	70.4	0.78	2.7	5.1	2.8	2.5	25	11.3	**FD 04**	15	2600	5300	27	15.2	**AFD 04**	15	5300	27	14.8	**FA 04**	15	5300	27	15.1
1.1	**BN 90S 4**	1390	7.6	•	76.5	76.2	72.2	0.77	2.70	4.6	2.6	2.2	21	12.2	**FD 14**	15	4800	8000	23	16.4	**AFD 14**	15	8000	23	16	**FA 14**	15	8000	23	16.3
1.5	**BN 90LA 4**	1410	10.2	•	78.7	78.5	74.9	0.77	3.6	5.3	2.8	2.4	28	13.6	**FD 05**	26	3400	6000	32	19.6	**AFD 05**	26	6000	32	19	**FA 05**	26	6000	32	20.3
1.85	**BN 90LB 4**	1390	12.7	•	78.6	78.9	77.2	0.79	4.3	5.1	2.8	2.6	30	15.1	**FD 05**	26	3200	5900	34	21.1	**AFD 05**	26	5900	34	20.5	**FA 05**	26	5900	34	21.8
2.2	**BN 100LA 4**	1410	14.9	•	81.1	81.4	79.9	0.75	5.2	4.5	2.2	2.0	40	18	**FD 15**	40	2600	4700	44	25	**AFD 15**	40	4700	44	24.4	**FA 15**	40	4700	44	25
3	**BN 100LB 4**	1410	20	•	82.6	83.8	83.7	0.77	6.8	5.0	2.3	2.2	54	22	**FD 15**	40	2400	4400	58	28	**AFD 15**	40	4400	58	27	**FA 15**	40	4400	58	29
4	**BN 112M 4**	1430	27	•	84.4	84.2	81.6	0.81	8.4	5.6	2.7	2.5	98	30	**FD 06S**	60	—	1400	107	40	**AFD 06S**	60	1400	107	39	**FA 06S**	60	2100	107	42
5.5	**BN 132S 4**	1440	36	•	84.7	84.8	82.5	0.81	11.6	5.5	2.3	2.2	213	44	**FD 56**	75	—	1050	223	57	**AFD 06**	75	1050	223	56	**FA 06**	75	1200	223	58
7.5	**BN 132MA 4**	1440	50	•	86.0	86.3	85.3	0.81	15.5	5.7	2.5	2.4	270	53	**FD 06**	100	—	950	280	66	**AFD 06**	100	950	280	65	**FA 07**	100	1000	280	71
9.2	**BN 132MB 4**	1440	61	•	88.4	88.6	87.5	0.81	18.8	5.9	2.7	2.5	319	59	**FD 07**	150	—	900	342	75	**AFD 07**	150	900	342	73	**FA 07**	150	900	342	77
11	**BN 160MR 4**	1440	73	•	87.6	87.8	86.0	0.81	22.4	6.0	2.7	2.5	360	70	**FD 07**	150	—	850	382	86	**AFD 07**	150	850	382	84	**FA 07**	150	850	382	88
15	**BN 160L 4**	1460	98	•	88.7	88.5	88.4	0.81	30	6.0	2.3	2.1	650	99	**FD 08**	200	—	750	725	129						**FA 08**	200	750	710	128
18.5	**BN 180M 4**	1460	121	•	89.3	89.5	89.2	0.81	37	6.2	2.6	2.5	790	115	**FD 08**	250	—	700	865	145						**FA 08**	250	700	850	144
22	**BN 180L 4**	1460	144	•	89.9	90.0	90.0	0.80	44	6.4	2.5	2.5	1250	135	**FD 09**	300	—	400	1450	175										
30	**BN 200L 4**	1460	196	•	91.4	91.7	91.0	0.80	59	7.1	2.7	2.8	1650	157	**FD 09**	400	—	300	1850	197										

○ = n.a. • = IE1



6P — 1000 min-1 - S1 — 50 Hz



															d.c. brake						c.c. brake with fixed air gap					a.c. brake				
															FD						AFD					FA				
P_n		n	M_n	IE1	η (100%)	η (75%)	η (50%)	cosφ	In 400V	Is/In	Ms/Mn	Ma/Mn	J_m x 10^{-4}	IM B5	Mod	Mb	Z_o 1/h		J_m x 10^{-4}	IM B5	Mod	Mb	Z_o 1/h	J_m x 10^{-4}	IM B5	Mod	Mb	Z_o 1/h	J_m x 10^{-4}	IM B5
kW		min-1	Nm		%	%	%		A				kgm²	Kg		Nm	NB	SB	kgm²	Kg		Nm	SB	kgm²	Kg		Nm		kgm²	Kg
0.09	BN 63A 6	880	0.98	○	41.0	41.0	32.9	0.53	0.60	2.1	2.1	1.8	3.4	4.6	FD 02	3.5	9000	14000	4.0	6.3	AFD 02	3.5	14000	4.0	6.1	FA 02	3.5	14000	4.0	6.1
0.12	BN 63B 6	870	1.32	○	45.0	44.0	41.8	0.60	0.64	2.1	1.9	1.7	3.7	4.9	FD 02	3.5	9000	14000	4.3	6.6	AFD 02	3.5	14000	4.3	6.4	FA 02	3.5	14000	4.3	6.4
0.18	BN 71A 6	900	1.91	○	55.0	55.5	51.0	0.69	0.68	2.6	1.9	1.7	8.4	5.5	FD 03	5	8100	13500	9.5	8.2	AFD 03	5	13500	9.5	7.9	FA 03	5.0	13500	9.5	7.9
0.25	BN 71B 6	900	2.70	○	62.0	58.5	51.4	0.71	0.82	2.6	1.9	1.7	10.9	6.7	FD 03	5	7800	13000	12	9.4	AFD 03	5	13000	12	9.1	FA 03	5.0	13000	12	9.1
0.37	BN 71C 6	910	3.9	○	66.0	60.0	53.3	0.69	1.17	3.0	2.4	2.0	12.9	7.7	FD 53	7.5	5100	9500	14	10.4	AFD 03	7.5	9500	14	10.1	FA 03	7.5	9500	14	10.1
0.37	BN 80A 6	910	3.9	○	68.0	67.4	63.3	0.68	1.15	3.2	2.2	2.0	21	9.9	FD 04	10	5200	8500	23	13.8	AFD 04	10	8500	23	13.4	FA 04	10	8500	23	13.7
0.55	BN 80B 6	920	5.7	○	70.0	69.8	64.3	0.68	1.67	3.9	2.6	2.2	25	11.3	FD 04	15	4800	7200	27	15.2	AFD 04	15	7200	27	14.8	FA 04	15	7200	27	15.1
0.75	BN 80C 6	920	7.8	•	70.0	70.0	64.4	0.65	2.38	3.8	2.5	2.2	28	12.2	FD 04	15	3400	6400	30	16.1	AFD 04	15	6400	30	15.7	FA 04	15	6400	30	16.0
0.75	BN 90S 6	920	7.8	•	70.0	69.0	64.2	0.68	2.27	3.8	2.4	2.2	26	12.6	FD 14	15	3400	6500	28	16.8	AFD 14	15	6500	28	16.4	FA 14	15	6500	28	16.7
1.1	BN 90L 6	920	11.4	•	72.9	72.6	69.1	0.69	3.2	3.9	2.3	2.0	33	15	FD 05	26	2700	5000	37	21	AFD 05	26	5000	37	20	FA 05	26	5000	37	22
1.5	BN 100LA 6	940	15.2	•	75.2	74.2	70.3	0.72	4.0	4.1	2.1	2.0	82	22	FD 15	40	1900	4100	86	28	AFD 15	40	4100	86	27	FA 15	40	4100	86	29
1.85	BN 100LB 6	930	19.0	•	76.6	72.8	62.6	0.73	4.8	4.6	2.1	2.0	95	24	FD 15	40	1700	3600	99	30	AFD 15	40	3600	99	29	FA 15	40	3600	99	31
2.2	BN 112M 6	940	22	•	78.5	79.0	76.5	0.73	5.5	4.8	2.2	2.0	168	32	FD 06S	60	—	2100	177	42	AFD 06S	60	2100	177	41	FA 06S	60	2100	177	44
3	BN 132S 6	940	30	•	79.7	77.0	75.1	0.76	7.1	5.1	1.9	1.8	216	36	FD 56	75	—	1400	226	49	AFD 06	75	1400	226	48	FA 06	75	1400	226	50
4	BN 132MA 6	950	40	•	81.4	81.5	79.5	0.77	9.2	5.5	2.0	1.8	295	45	FD 06	100	—	1200	305	58	AFD 06	100	1200	305	57	FA 07	100	1200	318	63
5.5	BN 132MB 6	945	56	•	83.1	80.9	79.1	0.78	12.2	6.1	2.1	1.9	383	56	FD 07	150	—	1050	406	72	AFD 07	150	1050	406	70	FA 07	150	1050	406	74
7.5	BN 160M 6	955	75	•	85.0	85.0	84.8	0.81	15.7	5.9	2.2	2.0	740	83	FD 08	170	—	900	815	112						FA 08	170	900	815	113
11	BN 160L 6	960	109	•	86.4	86.5	85.9	0.81	22.7	6.6	2.5	2.3	970	103	FD 08	200	—	800	1045	133						FA 08	200	800	1045	133
15	BN 180L 6	970	148	•	87.7	88.0	87.3	0.82	30	6.2	2.0	2.4	1550	130	FD 09	300	—	600	1750	170										
18.5	BN 200LA 6	960	184	•	88.6	88.0	87.3	0.81	37	5.9	2.0	2.3	1700	145	FD 09	400	—	450	1900	185										

○ = n.a. • = IE1

8P — 750 min^{-1} - S1 — 50 Hz

													d.c. brake					c.c. brake with fixed air gap					a.c. brake				
													FD					AFD					FA				
P_n kW			n min^{-1}	M_n Nm	η %	cosφ	In 400V A	Is / In	Ms / Mn	Ma / Mn	J_m x 10^{-4} kgm^2	IM B5 Kg	Mod	Mb Nm	Z_o 1/h NB	Z_o 1/h SB	J_m x 10^{-4} kgm^2	IM B5 Kg	Mod	Mb Nm	Z_o 1/h SB	J_m x 10^{-4} kgm^2	IM B5 Kg	Mod	Mb Nm	Z_o 1/h	J_m x 10^{-4} kgm^2	IM B5 Kg
0.09	**BN 71A**	**8**	680	1.26	47	0.59	0.47	2.3	2.4	2.3	10.9	6.7	**FD 03**	3.5	9000	16000	12.0	9.4	**AFD 03**	5	16000	12.0	9.1	**FA 03**	3.5	16000	12.0	9.1
0.12	**BN 71B**	**8**	680	1.69	51	0.59	0.58	2.1	2.3	2.2	12.9	7.7	**FD 03**	5.0	9000	16000	14.0	10.4	**AFD 03**	5	16000	14.0	10.1	**FA 03**	5.0	16000	14.0	10.1
0.18	**BN 80A**	**8**	690	2.49	51	0.60	0.85	2.4	2.2	2.2	15	8.2	**FD 04**	5.0	6500	11000	16.6	12.1	**AFD 04**	5	11000	16.6	11.7	**FA 04**	5.0	11000	16.6	12.0
0.25	**BN 80B**	**8**	680	3.51	54	0.63	1.06	2.4	2.0	1.9	20	9.9	**FD 04**	10.0	6000	10000	22	13.8	**AFD 04**	10	10000	22	13.4	**FA 04**	10.0	10000	23	13.7
0.37	**BN 90S**	**8**	675	5.2	58	0.60	1.53	2.6	2.3	2.1	26	12.6	**FD 14**	15.0	4800	7500	28	16.8	**AFD 14**	15	7500	28	16.4	**FA 14**	15.0	7500	28	16.7
0.55	**BN 90L**	**8**	670	7.8	62	0.60	2.13	2.6	2.2	2.0	33	15	**FD 05**	26	4000	6400	37	21	**AFD 05**	26	6400	37	20.4	**FA 05**	26	6400	37	22
0.75	**BN 100LA**	**8**	700	10.2	68	0.63	2.53	3.4	1.9	1.7	82	22	**FD 15**	26	2800	4800	86	28	**AFD 15**	26	4800	86	27.4	**FA 15**	26	4800	86	29
1.1	**BN 100LB**	**8**	700	15.0	68	0.64	3.65	3.2	1.7	1.7	95	24	**FD 15**	40	2500	4000	99	30	**AFD 15**	40	4000	99	29.4	**FA 15**	40	4000	99	31
1.5	**BN 112M**	**8**	710	20.2	71	0.66	4.6	3.7	1.8	1.9	168	32	**FD 06S**	60	—	3000	177	42	**AFD 06S**	60	3000	177	41	**FA 06S**	60	3000	177	44
2.2	**BN 132S**	**8**	710	29.6	75	0.66	6.4	3.8	1.8	2.0	295	45	**FD 56**	75	—	2300	305	58	**AFD 06**	75	2300	305	56.8	**FA 06**	75	2300	305	56
3	**BN 132MA**	**8**	710	40.4	76	0.69	8.3	3.9	1.6	1.8	370	53	**FD 06**	100	—	1900	394	69	**AFD 06**	100	1900	394	67.8	**FA 07**	100	1900	406	74



2/4P — 3000/1500 min^{-1} - S1 — 50 Hz



													d.c. brake						c.c. brake with fixed air gap						a.c. brake				
													FD						AFD						FA				
P_n		n	M_n	η	cosφ	In	Is	Ms	Ma	J_m	IM B5		Mod	Mb	Z_o 1/h		J_m	IM B5	Mod	Mb	Z_o 1/h	J_m	IM B5		Mod	Mb	Z_o 1/h	J_m	IM B5
						400V	In	Mn	Mn	x 10^{-4}							x 10^{-4}						x 10^{-4}						x 10^{-4}	
kW		min^{-1}	Nm	%		A				kgm^2	Kg			Nm	NB	SB	kgm^2	Kg		Nm	SB	kgm^2	Kg			Nm		kgm^2	Kg
0.20	**BN 63B** **2**	2700	0.71	55	0.82	0.64	3.5	2.1	1.9	2.9	4.4		**FD 02**	3.5	2200	2600	3.5	6.1	**AFD 02**	3.5	2600	3.5	5.9		**FA 02**	3.5	2600	3.5	5.9
0.15	**4**	1350	1.06	49	0.67	0.66	2.6	1.8	1.7						4000	5100					5100						5100		
0.28	**BN 71A** **2**	2700	0.99	56	0.82	0.88	2.9	1.9	1.7	4.7	4.4		**FD 03**	3.5	2100	2400	5.8	7.1	**AFD 03**	5	2400	5.8	6.8		**FA 03**	3.5	2400	5.8	6.8
0.20	**4**	1370	1.39	59	0.72	0.68	3.1	1.8	1.7						3800	4800					4800						4800		
0.37	**BN 71B** **2**	2740	1.29	56	0.82	1.16	3.5	1.8	1.8	5.8	5.1		**FD 03**	5.0	1400	2100	6.9	7.8	**AFD 03**	5	2100	6.9	7.5		**FA 03**	5.0	2100	6.9	7.5
0.25	**4**	1390	1.72	60	0.73	0.82	3.3	2.0	1.9						2900	4200					4200						4200		
0.45	**BN 71C** **2**	2780	1.55	63	0.85	1.21	3.8	1.8	1.8	6.9	5.9		**FD 03**	5.0	1400	2100	8.0	8.6	**AFD 03**	5	2100	8.0	8.3		**FA 03**	5.0	2100	8.0	8.3
0.30	**4**	1400	2.0	63	0.73	0.94	3.6	2.0	1.9						2900	4200					4200						4200		
0.55	**BN 80A** **2**	2800	1.9	63	0.85	1.48	3.9	1.7	1.7	15	8.2		**FD 04**	5.0	1600	2300	17	12.1	**AFD 04**	5	2300	17	11.7		**FA 04**	5.0	2300	16.6	12.0
0.37	**4**	1400	2.5	67	0.79	1.01	4.1	1.8	1.9						3000	4000					4000						4000		
0.75	**BN 80B** **2**	2780	2.6	65	0.85	1.96	3.8	1.9	1.8	20	9.9		**FD 04**	10	1400	1600	22	13.8	**AFD 04**	10	1600	22	13.4		**FA 04**	10	1600	22	13.7
0.55	**4**	1400	3.8	68	0.81	1.44	3.9	1.7	1.7						2700	3600					3600						3600		
1.1	**BN 90S** **2**	2790	3.8	71	0.82	2.73	4.7	2.3	2.0	21	12.2		**FD 14**	10	1500	1600	23	16.4	**AFD 14**	10	1600	23	16		**FA 14**	10	1600	23	16.3
0.75	**4**	1390	5.2	66	0.79	2.08	4.6	2.4	2.2						2300	2800					2800						2800		
1.5	**BN 90L** **2**	2780	5.2	70	0.85	3.64	4.5	2.4	2.1	28	14.0		**FD 05**	26	1050	1200	32	20	**AFD 05**	26	1200	32	19.4		**FA 05**	26	1200	32	21
1.1	**4**	1390	7.6	73	0.81	2.69	4.7	2.5	2.2						1600	2000					2000						2000		
2.2	**BN 100LA** **2**	2800	7.5	72	0.85	5.2	4.5	2.0	1.9	40	18.3		**FD 15**	26	600	900	44	25	**AFD 15**	26	900	44	24.4		**FA 15**	26	900	44	25
1.5	**4**	1410	10.2	73	0.79	3.8	4.7	2.0	2.0						1300	2300					2300						2300		
3.5	**BN 100LB** **2**	2850	11.7	80	0.84	7.5	5.4	2.2	2.1	61	25		**FD 15**	40	500	900	65	31	**AFD 15**	40	900	65	30		**FA 15**	40	900	65	32
2.5	**4**	1420	16.8	82	0.80	5.5	5.2	2.2	2.2						1000	2100					2100						2100		
4	**BN 112M** **2**	2880	13.3	79	0.83	8.8	6.1	2.4	2.0	98	30		**FD 06S**	60	—	700	107	40	**AFD 06S**	60	700	107	39		**FA 06S**	60	700	107	42
3.3	**4**	1420	22.2	80	0.80	7.4	5.1	2.1	2.0						—	1200					1200						1200		
5.5	**BN 132S** **2**	2890	18.2	80	0.87	11.4	5.9	2.4	2.0	213	44		**FD 56**	75	—	350	223	57	**AFD 06**	75	350	223	56		**FA 06**	75	350	223	58
4.4	**4**	1440	29	82	0.84	9.2	5.3	2.2	2.0						—	900					900						900		
7.5	**BN 132MA** **2**	2900	25	82	0.87	15.2	6.5	2.4	2.0	270	53		**FD 06**	100	—	350	280	66	**AFD 06**	100	350	280	65		**FA 07**	100	350	293	71
6	**4**	1430	40	84	0.85	12.1	5.8	2.3	2.1						—	900					900						900		
9.2	**BN 132MB** **2**	2920	30	83	0.86	18.6	6.0	2.6	2.2	319	59		**FD 07**	150	—	300	342	75	**AFD 07**	150	300	342	73		**FA 07**	150	300	342	77
7.3	**4**	1440	48	85	0.85	14.6	5.5	2.3	2.1						—	800					800						800		

2/6P — 3000/1000 min^{-1} - S3 60/40% — 50 Hz

													d.c. brake						c.c. brake with fixed air gap						a.c. brake				
													FD						AFD						FA				
P_n kW			n min^{-1}	M_n Nm	η %	cosφ	In 400V A	Is / In	Ms / Mn	Ma / Mn	J_m x 10^{-4} kgm^2	IM B5 Kg	Mod	Mb Nm	Z_o 1/h NB	Z_o 1/h SB	J_m x 10^{-4} kgm^2	IM B5 Kg	Mod	Mb Nm	Z_o 1/h SB	J_m x 10^{-4} kgm^2	IM B5 Kg	Mod	Mb Nm	Z_o 1/h	J_m x 10^{-4} kgm^2	IM B5 Kg
0.25	**BN 71A**	**2**	2850	0.84	60	0.82	0.73	4.3	1.9	1.8	6.9	5.9	**FD 03**	1.75	1500	1700	8.0	8.6	**AFD 03**	2.5	1700	8.0	8.3	**FA 03**	2.5	1700	8.0	8.3
0.08		**6**	910	0.84	43	0.70	0.38	2.1	1.4	1.5					10000	13000					13000					13000		
0.37	**BN 71B**	**2**	2880	1.23	62	0.80	1.08	4.4	1.9	1.8	9.1	7.3	**FD 03**	3.5	1000	1300	10.2	10.0	**AFD 03**	5	1300	10.2	9.7	**FA 03**	3.5	1300	10.2	9.7
0.12		**6**	900	1.27	44	0.73	0.54	2.4	1.4	1.5					9000	11000					11000					11000		
0.55	**BN 80A**	**2**	2800	1.88	63	0.86	1.47	4.5	1.9	1.7	20	9.9	**FD 04**	5.0	1500	1800	22	13.8	**AFD 04**	5	1800	22	13.4	**FA 04**	5.0	1800	22	13.7
0.18		**6**	930	1.85	52	0.65	0.77	3.3	2.0	1.9					4100	6300					6300					6300		
0.75	**BN 80B**	**2**	2800	2.6	66	0.87	1.89	4.3	1.8	1.6	25	11.3	**FD 04**	5.0	1700	1900	27	15.2	**AFD 04**	5	1900	27	14.8	**FA 04**	5.0	1900	27	15.1
0.25		**6**	930	2.6	54	0.67	1.00	3.2	1.7	1.8					3800	6000					6000					6000		
1.10	**BN 90L**	**2**	2860	3.7	67	0.84	2.82	4.7	2.1	1.9	28	14.0	**FD 05**	13	1400	1600	32	20	**AFD 05**	13	1600	32	19.4	**FA 05**	13	1600	32	21
0.37		**6**	920	3.8	59	0.71	1.27	3.3	1.6	1.6					3400	5200					5200					5200		
1.5	**BN 100LA**	**2**	2880	5	73	0.84	3.53	5.1	1.9	2.0	40	18.3	**FD 15**	13	1000	1200	44	24	**AFD 15**	13	1200	44	23.4	**FA 15**	13	1200	44	25
0.55		**6**	940	5.6	64	0.67	1.85	3.5	1.7	1.8					2900	4000					4000					4000		
2.2	**BN 100LB**	**2**	2900	7.2	77	0.85	4.9	5.9	2.0	2.0	61	25	**FD 15**	26	700	900	65	31	**AFD 15**	26	900	65	30	**FA 15**	26	900	65	32
0.75		**6**	950	7.5	67	0.64	2.5	3.3	1.9	1.8					2100	3000					3000					3000		
3	**BN 112M**	**2**	2900	9.9	78	0.87	6.4	6.3	2.0	2.1	98	30	**FD 06S**	40	—	1000	107	40	**AFD 06S**	40	1000	107	39	**FA 06S**	40	1000	107	32
1.1		**6**	950	11.1	72	0.64	3.4	3.9	1.8	1.8					—	2600					2600					2600		
4.5	**BN 132S**	**2**	2910	14.8	78	0.84	9.9	5.8	1.9	1.8	213	44	**FD 56**	37	—	500	223	57	**AFD 06**	37	500	223	56	**FA 06**	37	500	223	58
1.5		**6**	960	14.9	74	0.67	4.4	4.2	1.9	2.0					—	2100					2100					2100		
5.5	**BN 132M**	**2**	2920	18.0	78	0.87	11.7	6.2	2.1	1.9	270	53	**FD 56**	50	—	400	280	66	**AFD 06**	62	400	280	65	**FA 06**	50	400	280	67
2.2		**6**	960	22	77	0.71	5.8	4.3	2.1	2.0					—	1900					1900					1900		



2/8P — 3000/750 min^{-1} - S3 60/40% — 50 Hz



													d.c. brake						c.c. brake with fixed air gap						a.c. brake				
													FD						AFD						FA				
P_n kW			n min^{-1}	M_n Nm	η %	cosφ	In 400V A	Is/In	Ms/Mn	Ma/Mn	J_m x 10^{-4} kgm^2	IM B5 Kg	Mod	Mb Nm	Z_o 1/h NB	Z_o 1/h SB	J_m x 10^{-4} kgm^2	IM B5 Kg	Mod	Mb Nm	Z_o 1/h SB	J_m x 10^{-4} kgm^2	IM B5 Kg	Mod	Mb Nm	Z_o 1/h	J_m x 10^{-4} kgm^2	IM B5 Kg
0.25	**BN 71A**	**2**	2790	0.86	61	0.87	0.68	3.9	1.8	1.9	10.9	6.7	**FD 03**	1.75	1300	1400	12	9.4	**AFD 03**	2.5	1400	12	9.1	**FA 03**	2.5	1400	12	9.1
0.06		**8**	680	0.84	31	0.61	0.46	2.0	1.8	1.9					10000	13000					13000					13000		
0.37	**BN 71B**	**2**	2800	1.26	63	0.86	0.99	3.9	1.8	1.9	12.9	7.7	**FD 03**	3.5	1200	1300	14	10.4	**AFD 03**	5	1300	14	10.1	**FA 03**	3.5	1300	14	10.1
0.09		**8**	670	1.28	34	0.75	0.51	1.8	1.4	1.5					9500	13000					13000					13000		
0.55	**BN 80A**	**2**	2830	1.86	66	0.86	1.40	4.4	2.1	2.0	20	9.9	**FD 04**	5.0	1500	1800	22	13.8	**AFD 04**	5	1800	22	13.4	**FA 04**	5.0	1800	22	13.7
0.13		**8**	690	1.80	41	0.64	0.72	2.3	1.6	1.7					5600	8000					8000					8000		
0.75	**BN 80B**	**2**	2800	2.6	68	0.88	1.81	4.6	2.1	2.0	25	11.3	**FD 04**	10	1700	1900	27	15.2	**AFD 04**	10	1900	27	14.8	**FA 04**	10	1900	27	15.1
0.18		**8**	690	2.5	43	0.66	0.92	2.3	1.6	1.7					4800	7300					7300					7300		
1.10	**BN 90L**	**2**	2830	3.7	63	0.84	3.00	4.5	2.1	1.9	28	14.0	**FD 05**	13	1400	1600	32	20	**AFD 05**	13	1600	32	19.4	**FA 05**	13	1600	32	21
0.28		**8**	690	3.9	48	0.63	1.34	2.4	1.8	1.9					3400	5100					5100					5100		
1.5	**BN 100LA**	**2**	2880	5.0	69	0.85	3.69	4.7	1.9	1.8	40	18.3	**FD 15**	13	1000	1200	44	25	**AFD 15**	13	1200	44	14.4	**FA 15**	13	1200	44	25
0.37		**8**	690	5.1	46	0.63	1.84	2.1	1.6	1.6					3300	5000					5000					5000		
2.4	**BN 100LB**	**2**	2900	7.9	75	0.82	5.6	5.4	2.1	2.0	61	25	**FD 15**	26	550	700	65	31	**AFD 15**	26	700	65	30	**FA 15**	26	700	65	32
0.55		**8**	700	7.5	54	0.58	2.5	2.6	1.8	1.8					2000	3500					3500					3500		
3	**BN 112M**	**2**	2900	9.9	76	0.87	6.5	6.3	2.1	1.9	98	30	**FD 06S**	40	—	900	107	40	**AFD 06S**	40	900	107	39	**FA 06S**	40	900	107	42
0.75		**8**	690	10.4	60	0.65	2.8	2.5	1.6	1.6					—	2900					2900					2900		
4	**BN 132S**	**2**	2870	13.3	73	0.84	9.4	5.6	2.3	2.4	213	44	**FD 56**	37	—	500	223	57	**AFD 06**	37	500	223	56	**FA 06**	37	500	223	58
1		**8**	690	13.8	66	0.62	3.5	2.9	1.9	1.8					—	3500					3500					3500		
5.5	**BN 132M**	**2**	2870	18.3	75	0.84	12.6	6.1	2.4	2.5	270	53	**FD 06**	50	—	400	280	66	**AFD 06**	62	400	280	65	**FA 06**	50	400	280	67
1.5		**8**	690	21	68	0.63	5.1	2.9	1.9	1.9					—	2400					2400					2400		

2/12P — 3000/500 min^{-1} - S3 60/40% — 50 Hz

													d.c. brake						c.c. brake with fixed air gap						a.c. brake				
													FD						AFD						FA				
P_n kW			n min^{-1}	M_n Nm	η %	cosφ	In 400V A	Is/In	Ms/Mn	Ma/Mn	J_m x 10^{-4} kgm^2	IM B5 Kg	Mod	Mb Nm	Z_o 1/h NB	Z_o 1/h SB	J_m x 10^{-4} kgm^2	IM B5 Kg	Mod	Mb Nm	Z_o 1/h SB	J_m x 10^{-4} kgm^2	IM B5 Kg	Mod	Mb Nm	Z_o 1/h	J_m x 10^{-4} kgm^2	IM B5 Kg
0.55	**BN 80B**	**2**	2820	1.86	64	0.89	1.39	4.2	1.6	1.7	25	11.3	**FD 04**	5.0	1000	1300	27	15.2	**AFD 04**	5	1300	27	14.8	**FA 04**	5.0	1300	27	15.1
0.09		**12**	430	2.0	30	0.63	0.69	1.8	1.9	1.8					8000	12000					12000					12000		
0.75	**BN 90L**	**2**	2790	2.6	56	0.89	2.17	4.2	1.8	1.7	26	12.6	**FD 05**	13	1000	1150	30	18.6	**AFD 05**	13	1150	30	18.0	**FA 05**	13	1150	30	19.3
0.12		**12**	430	2.7	26	0.63	1.06	1.7	1.4	1.6					4600	6300					6300					6300		
1.10	**BN 100LA**	**2**	2850	3.7	65	0.85	2.87	4.5	1.6	1.8	40	18.3	**FD 15**	13	700	900	44	25	**AFD 15**	13	900	44	24.4	**FA 15**	13	900	44	25
0.18		**12**	430	4.0	26	0.54	1.85	1.5	1.3	1.5					4000	6000					6000					6000		
1.5	**BN 100LB**	**2**	2900	4.9	67	0.86	3.76	5.6	1.9	1.9	54	22	**FD 15**	13	700	900	58	28	**AFD 15**	13	900	58	27	**FA 15**	13	900	58	29
0.25		**12**	440	5.4	36	0.46	2.18	1.8	1.7	1.8					3800	5000					5000					5000		
2	**BN 112M**	**2**	2900	6.6	74	0.88	4.43	6.5	2.1	2.0	98	30	**FD 06S**	20	—	800	107	40	**AFD 06S**	20	800	107	39	**FA 06S**	20	800	107	42
0.3		**12**	460	6.2	46	0.43	2.19	2.0	2.1	2.0					—	3400					3400					3400		
3	**BN 132S**	**2**	2920	9.8	74	0.87	6.7	6.8	2.3	1.9	213	44	**FD 56**	37	—	450	223	57	**AFD 06**	37	450	223	56	**FA 06**	37	450	223	58
0.5		**12**	470	10.2	51	0.43	3.3	2.0	1.7	1.6					—	3000					3000					3000		
4	**BN 132M**	**2**	2920	13.1	75	0.89	8.6	5.9	2.4	2.3	270	53	**FD 56**	37	—	400	280	66	**AFD 06**	37	400	280	65	**FA 06**	37	400	280	67
0.7		**12**	460	14.5	53	0.44	4.3	1.9	1.7	1.6					—	2800					2800					2800		



4/6P — 1500/1000 min^{-1} - S1 — 50 Hz

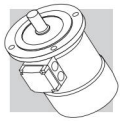

													d.c. brake						c.c. brake with fixed air gap						a.c. brake				
													FD						AFD						FA				
P_n kW			n min^{-1}	M_n Nm	η %	cosφ	In 400V A	Is/In	Ms/Mn	Ma/Mn	J_m x 10^{-4} kgm^2	IM B5 Kg	Mod	Mb Nm	Z_o 1/h NB	Z_o 1/h SB	J_m x 10^{-4} kgm^2	IM B5 Kg	Mod	Mb Nm	Z_o 1/h SB	J_m x 10^{-4} kgm^2	IM B5 Kg	Mod	Mb Nm	Z_o 1/h	J_m x 10^{-4} kgm^2	IM B5 Kg
0.22	**BN 71B**	**4**	1410	1.5	64	0.74	0.67	3.9	1.8	1.9	9.1	7.3	**FD 03**	3.5	2500	3500	10.2	10.0	**AFD 03**	5	3500	10.2	9.7	**FA 03**	3.5	3500	10.2	9.7
0.13		**6**	920	1.4	43	0.67	0.65	2.3	1.6	1.7					5000	9000					9000					9000		
0.30	**BN 80A**	**4**	1410	2.0	61	0.82	0.87	3.5	1.3	1.5	15	8.2	**FD 04**	5.0	2500	3100	16.6	12.1	**AFD 04**	5	3100	16.6	11.7	**FA 04**	5.0	3100	16.6	12.0
0.20		**6**	930	2.1	54	0.66	0.81	3.2	1.9	2.0					4000	6000					6000					6000		
0.40	**BN 80B**	**4**	1430	2.7	63	0.75	1.22	3.9	1.8	1.8	20	9.9	**FD 04**	10	1800	2300	22	13.8	**AFD 04**	10	2300	22	13.4	**FA 04**	10	2300	22	13.7
0.26		**6**	930	2.7	55	0.70	0.97	2.7	1.5	1.6					3600	5500					5500					5500		
0.55	**BN 90S**	**4**	1420	3.7	70	0.78	1.45	4.5	2.0	1.9	21	12.2	**FD 14**	10	1500	2100	23	16.1	**AFD 14**	10	2100	23	15.7	**FA 14**	10	2100	23	16.3
0.33		**6**	930	3.4	62	0.70	1.10	3.7	2.3	2.0					2500	4100					4100					4100		
0.75	**BN 90L**	**4**	1420	5.0	74	0.78	1.88	4.3	1.9	1.8	28	14	**FD 05**	13	1400	2000	32	20	**AFD 05**	13	2000	32	19.4	**FA 05**	13	2000	32	21
0.45		**6**	920	4.7	66	0.71	1.39	3.3	2.0	1.9					2300	3600					3600					3600		
1.1	**BN 100LA**	**4**	1450	7.2	74	0.79	2.72	5.0	1.7	1.9	82	22	**FD 15**	26	1400	2000	86	28	**AFD 15**	26	2000	86	27	**FA 15**	26	2000	86	29
0.8		**6**	950	8.0	65	0.69	2.57	4.1	1.9	2.1					2100	3300					3300					3300		
1.5	**BN 100LB**	**4**	1450	9.9	75	0.79	3.65	5.1	1.7	1.9	95	25	**FD 15**	26	1300	1800	99	31	**AFD 15**	26	1800	99	30	**FA 15**	26	1800	99	32
1.1		**6**	950	11.1	72	0.68	3.24	4.3	2.0	2.1					2000	3000					3000					3000		
2.3	**BN 112M**	**4**	1450	15.2	75	0.78	5.7	5.2	1.8	1.9	168	32	**FD 06S**	40	—	1600	177	42	**AFD 06S**	40	1600	177	41	**FA 06S**	40	1600	177	44
1.5		**6**	960	14.9	73	0.72	4.1	4.9	2.0	2.0					—	2400					2400					2400		
3.1	**BN 132S**	**4**	1460	20	83	0.83	6.5	5.9	2.1	2.0	213	44	**FD 56**	37	—	1200	223	57	**AFD 06**	62	1200	223	56	**FA 06**	37	1200	223	58
2		**6**	960	20	77	0.75	4.9	4.5	2.1	2.1					—	1900					1900					1900		
4.2	**BN 132MA**	**4**	1460	27	84	0.82	8.8	5.9	2.1	2.2	270	53	**FD 06**	50	—	900	280	66	**AFD 06**	62	900	280	65	**FA 06**	50	900	280	67
2.6		**6**	960	26	79	0.72	6.6	4.3	2.0	2.0					—	1500					1500					1500		

4/8P — 1500/750 min^{-1} - S1 — 50 Hz

													d.c. brake						c.c. brake with fixed air gap						a.c. brake				
													FD						AFD						FA				
P_n kW			n min^{-1}	M_n Nm	η %	cosφ	In 400V A	Is/In	Ms/Mn	Ma/Mn	J_m x 10^{-4} kgm^2	IM B5 Kg	Mod	Mb Nm	Z_o 1/h NB	Z_o 1/h SB	J_m x 10^{-4} kgm^2	IM B5 Kg	Mod	Mb Nm	Z_o 1/h SB	J_m x 10^{-4} kgm^2	IM B5 Kg	Mod	Mb Nm	Z_o 1/h	J_m x 10^{-4} kgm^2	IM B5 Kg
0.37	**BN 80A**	**4**	1400	2.5	63	0.82	1.03	3.3	1.4	1.4	15	8.2	**FD 04**	10	2300	3500	16.6	12.1	**AFD 04**	10	3500	16.6	11.7	**FA 04**	10	3500	16.6	12.0
0.18		**8**	690	2.5	44	0.60	0.98	2.2	1.5	1.6					4500	7000					7000					7000		
0.55	**BN 80B**	**4**	1390	3.8	65	0.86	1.42	3.8	1.7	1.6	20	9.9	**FD 04**	10	2200	2900	22	13.8	**AFD 04**	10	2900	22	13.4	**FA 04**	10	2900	22	13.7
0.30		**8**	670	4.3	49	0.65	1.36	2.3	1.7	1.8					4200	6500					6500					6500		
0.65	**BN 90S**	**4**	1390	4.5	73	0.85	1.51	4.0	1.9	1.9	28	13.6	**FD 14**	15	2300	2800	30	17.8	**AFD 14**	15	2800	30	17.4	**FA 14**	15	2800	30	17.7
0.35		**8**	690	4.8	49	0.57	1.81	2.5	2.1	2.2					3500	6000					6000					6000		
0.9	**BN 90L**	**4**	1370	6.3	73	0.87	2.05	3.8	1.8	1.8	30	15.1	**FD 05**	26	1700	2100	34	21	**AFD 05**	26	2100	34	20.4	**FA 05**	26	2100	34	22
0.5		**8**	670	7.1	57	0.62	2.04	2.4	2.1	2.0					2500	4200					4200					4200		
1.30	**BN 100LA**	**4**	1420	8.7	72	0.83	3.14	4.3	1.7	1.8	82	22	**FD 15**	40	1300	1700	86	28	**AFD 15**	40	1700	86	27	**FA 15**	40	1700	86	29
0.70		**8**	700	9.6	58	0.64	2.72	2.8	1.8	1.8					2000	3400					3400					3400		
1.8	**BN 100LB**	**4**	1420	12.1	69	0.87	4.3	4.2	1.6	1.7	95	25	**FD 15**	40	1200	1700	99	31	**AFD 15**	40	1700	99	30	**FA 15**	40	1700	99	32
0.9		**8**	700	12.3	62	0.63	3.3	3.2	1.7	1.8					1600	2600					2600					2600		
2.2	**BN 112M**	**4**	1440	14.6	77	0.85	4.9	5.3	1.8	1.8	168	32	**FD 06S**	60	—	1200	177	42	**AFD 06S**	60	1200	177	41	**FA 06S**	60	1200	177	43
1.2		**8**	710	16.1	70	0.63	3.9	3.3	1.9	1.8					—	2000					2000					2000		
3.6	**BN 132S**	**4**	1440	24	80	0.82	7.9	6.5	2.1	1.9	295	45	**FD 56**	75	—	1000	305	58	**AFD 06**	75	1000	305	57	**FA 06**	75	1000	305	59
1.8		**8**	720	24	72	0.55	6.6	4.6	1.9	2.0					—	1400					1400					1400		
4.6	**BN 132M**	**4**	1450	30	81	0.83	9.9	6.5	2.2	1.9	383	56	**FD 06**	100	—	1000	393	69	**AFD 06**	100	1000	393	68	**FA 07**	100	1000	406	74
2.3		**8**	720	31	73	0.54	8.4	4.4	2.3	2.0					—	1300					1300					1300		



2P — 3000 min^{-1} - S1 — 50 Hz

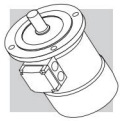

															d.c. brake						c.c. brake with fixed air gap					a.c. brake				
															FD						AFD					FA				
P_n kW		n min^{-1}	M_n Nm	IE1	η (100%) %	η (75%) %	η (50%) %	cosφ	In 400V A	Is/In	Ms/Mn	Ma/Mn	J_m x 10^{-4} kgm^2	IM B5 Kg	Mod	Mb Nm	Z_o 1/h NB	Z_o 1/h SB	J_m x 10^{-4} kgm^2	IM B5 Kg	Mod	Mb Nm	Z_o 1/h SB	J_m x 10^{-4} kgm^2	IM B5 Kg	Mod	Mb Nm	Z_o 1/h	J_m x 10^{-4} kgm^2	IM B5 Kg
0.18	**M 05A 2**	2730	0.63	○	59.9	56.9	51.9	0.77	0.56	3.0	2.1	2.0	2.0	3.2	**FD 02**	1.75	3900	4800	2.6	4.9	**AFD 02**	1.75	4800	2.6	4.7	**FA 02**	1.75	4800	2.6	4.7
0.25	**M 05B 2**	2740	0.87	○	66.0	64.8	64.8	0.76	0.72	3.3	2.3	2.3	2.3	3.6	**FD 02**	1.75	3900	4800	3.0	5.3	**AFD 02**	1.75	4800	3.0	5.1	**FA 02**	1.75	4800	3.0	5.1
0.37	**M 05C 2**	2800	1.26	○	69.1	66.8	66.8	0.78	0.99	3.9	2.6	2.6	3.3	4.8	**FD 02**	3.5	3600	4500	3.9	6.5	**AFD 02**	3.5	4500	3.9	6.3	**FA 02**	3.5	4500	3.9	6.3
0.55	**M 1SD 2**	2820	1.86	○	76.0	75.8	74.8	0.76	1.37	5.0	2.9	2.8	4.1	5.8	**FD 03**	5	2900	4200	5.3	8.5	**AFD 03**	5	4200	5.3	8.2	**FA 03**	5	4200	5.3	8.2
0.75	**M 1LA 2**	2810	2.6	○	76.6	76.2	76.2	0.76	1.86	5.1	3.1	2.8	5.0	6.9	**FD 03**	5	1900	3300	6.1	9.6	**AFD 03**	7.5	3300	6.1	9.3	**FA 03**	5	3300	6.1	9.3
1.1	**M 2SA 2**	2800	3.8	•	76.4	76.2	75.0	0.81	2.57	4.8	2.8	2.4	9.0	8.8	**FD 04**	10	1500	3000	10.6	11.9	**AFD 04**	10	3000	10.6	11.5	**FA 04**	10	3000	10.6	12.6
1.5	**M 2SB 2**	2800	5.1	•	79.1	79.5	77.2	0.81	3.4	4.9	2.7	2.4	11.4	10.6	**FD 04**	15	1300	2600	13.0	9.9	**AFD 04**	15	2600	13.0	9.5	**FA 04**	15	2600	13.0	14.4
2.2	**M 3SA 2**	2880	7.3	•	82.7	82.1	81.0	0.80	4.8	6.3	2.9	2.7	24	15.5	**FD 15**	26	1100	2400	28	22	**AFD 15**	26	2400	28	21.4	**FA 15**	26	2400	28	23
3	**M 3LA 2**	2860	10.0	•	81.5	81.3	77.4	0.79	6.7	5.6	2.6	2.2	31	18.7	**FD 15**	26	700	1600	35	25	**AFD 15**	26	1600	35	24.4	**FA 15**	26	1600	35	26
4	**M 3LB 2**	2870	13.3	•	83.1	83.0	77.8	0.80	8.7	5.8	2.7	2.5	39	22	**FD 15**	40	450	900	43	28	**AFD 15**	40	900	43	27	**FA 15**	40	900	43	29
5.5	**M 4SA 2**	2890	18.2	•	84.7	84.5	81.2	0.84	11.2	5.9	2.6	2.2	101	33	**FD 06**	50	—	600	112	46	**AFD 06**	62	600	112	45	**FA 06**	50	600	112	47
7.5	**M 4SB 2**	2900	25	•	86.5	86.3	84.4	0.85	14.7	6.4	2.6	2.2	145	40	**FD 06**	50	—	550	154	53	**AFD 06**	62	550	154	52	**FA 06**	50	550	154	54
9.2	**M 4LA 2**	2930	30	•	87.0	86.5	83.6	0.86	17.7	6.7	2.8	2.3	178	51	**FD 56**	75	—	430	189	64	**AFD 06**	75	430	189	63	**FA 06**	75	430	189	65
11	**M 4LC 2**	2920	36	•	87.6	87.0	86.0	0.88	20.6	6.9	2.9	2.5	210	60																
15	**M 5SB 2**	2930	49	•	89.6	89.4	88.0	0.86	28.1	7.1	2.6	2.3	340	70																
18.5	**M 5SC 2**	2930	60	•	90.4	90.1	89.0	0.86	34	7.6	2.7	2.3	420	83																
22	**M 5LA 2**	2930	72	•	89.9	89.7	89.5	0.88	40	7.8	2.6	2.4	490	95																

○ = n.a. • = IE1

4P — 1500 min^{-1} - S1 — 50 Hz

															d.c. brake						c.c. brake with fixed air gap						a.c. brake				
															FD						AFD						FA				
P_n		n	M_n	IE1	η (100%)	η (75%)	η (50%)	cosφ	In 400V	Is/In	Ms/Mn	Ma/Mn	J_m x 10^{-4}	IM B5	Mod	Mb	Z_o 1/h		J_m x 10^{-4}	IM B5	Mod	Mb	Z_o 1/h	J_m x 10^{-4}	IM B5	Mod	Mb	Z_o 1/h	J_m x 10^{-4}	IM B5
kW		min^{-1}	Nm		%	%	%		A				kgm^2	Kg		Nm	NB	SB	kgm^2	Kg		Nm	SB	kgm^2	Kg		Nm		kgm^2	Kg
0.09	**M 0B 4**	1350	0.64	○	51.7	47.6	42.9	0.60	0.42	2.6	2.5	2.4	1.5	2.9																	
0.12	**M 05A 4**	1350	0.85	○	59.8	56.2	47.0	0.62	0.47	2.6	1.9	1.8	2.0	3.2	**FD 02**	1.75	10000	13000	2.6	4.9	**AFD 02**	1.75	13000	2.6	4.7	**FA 02**	1.75	13000	2.6	4.7
0.18	**M 05B 4**	1320	1.30	○	54.8	52.9	52.5	0.67	0.71	2.6	2.2	2.0	2.3	3.6	**FD 02**	3.5	10000	13000	3.0	5.3	**AFD 02**	3.5	13000	3.0	5.1	**FA 02**	3.5	13000	3.0	5.1
0.25	**M 05C 4**	1340	1.78	○	65.3	65.0	57.9	0.69	0.80	2.7	2.1	1.9	3.3	4.8	**FD 02**	3.5	7800	10000	3.9	6.5	**AFD 02**	3.5	10000	3.9	6.3	**FA 02**	3.5	10000	3.9	6.3
0.37	**M 1SD 4**	1370	2.6	○	66.8	66.7	63.0	0.76	1.05	3.7	2.0	1.9	6.9	5.5	**FD 03**	5	6000	9400	8.0	8.2	**AFD 03**	7.5	9400	8.0	7.9	**FA 03**	5	9400	8.0	7.9
0.55	**M 1LA 4**	1380	3.8	○	69.0	68.9	68.8	0.74	1.55	4.1	2.3	2.3	9.1	6.9	**FD 53**	7.5	4300	8700	10.2	9.6	**AFD 03**	7.5	8700	10.2	9.3	**FA 03**	7.5	8700	10.2	9.3
0.75	**M 2SA 4**	1400	5.1	•	75.0	74.5	69.3	0.78	1.85	4.9	2.7	2.5	20	9.2	**FD 04**	15	4100	7800	22	13.1	**AFD 04**	15	7800	22	12.7	**FA 04**	15	7800	22	13.0
1.1	**M 2SB 4**	1400	7.5	•	76.4	76.2	70.4	0.78	2.66	5.1	2.8	2.5	25	10.6	**FD 04**	15	2600	5300	27	14.5	**AFD 04**	15	5300	27	14.1	**FA 04**	15	5300	27	14.4
1.5	**M 3SA 4**	1410	10.2	•	79.6	80.5	79.3	0.77	3.5	4.6	2.1	2.1	34	15.5	**FD 15**	26	2800	4900	38	22	**AFD 15**	26	4900	38	21.4	**FA 15**	26	4900	38	23
2.2	**M 3LA 4**	1410	14.9	•	81.1	81.4	79.9	0.75	5.2	4.5	2.2	2.0	40	17	**FD 15**	40	2600	4700	44	24	**AFD 15**	40	4700	44	23.4	**FA 15**	40	4700	44	24
3	**M 3LB 4**	1410	20	•	82.6	83.8	83.7	0.77	6.8	5.0	2.3	2.2	54	21	**FD 15**	40	2400	4400	58	27	**AFD 15**	40	4400	58	26	**FA 15**	40	4400	58	28
4	**M 3LC 4**	1400	27	○	82.7	83.1	80.5	0.78	9.0	4.7	2.3	2.2	61	23	**FD 55**	55	—	1300	65	29	—	—	—	—	—	**FA 15**	40	1300	65	30
5.5	**M 4SA 4**	1440	36	•	84.7	84.8	82.5	0.81	11.6	5.5	2.3	2.2	213	42	**FD 56**	75	—	1050	223	55	**AFD 06**	75	1050	223	54	**FA 06**	75	1050	223	56
7.5	**M 4LA 4**	1440	50	•	86.0	86.3	85.3	0.81	15.5	5.7	2.5	2.4	270	51	**FD 06**	100	—	950	280	64	**AFD 06**	100	950	280	63	**FA 07**	100	950	280	65
9.2	**M 4LB 4**	1440	61	•	88.4	88.6	87.5	0.81	18.8	5.9	2.7	2.5	319	57	**FD 07**	150	—	900	342	73	**AFD 07**	150	900	342	71	**FA 07**	150	900	342	75
11	**M 4LC 4**	1440	73	•	87.6	87.8	86.0	0.81	22.4	6.0	2.7	2.5	360	65	**FD 07**	150	—	850	382	81	**AFD 07**	150	850	382	79	**FA 07**	150	850	382	83
15	**M 5SB 4**	1460	98	•	88.7	88.5	88.4	0.81	30.1	6.0	2.3	2.1	650	85	**FD 08**	200	—	750	725	115						**FA 08**	200	750	710	114
18.5	**M 5LA 4**	1460	121	•	89.3	89.5	89.2	0.81	37	6.2	2.6	2.5	790	101	**FD 08**	250	—	700	865	131						**FA 08**	250	700	850	130

○ = n.a. • = IE1



6P — 1000 min^{-1} - S1 — 50 Hz

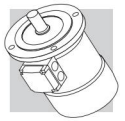

															d.c. brake						c.c. brake with fixed air gap						a.c. brake				
															FD						AFD						FA				
P_n		n	M_n	IE1	η (100%)	η (75%)	η (50%)	cosφ	In 400V	Is / In	Ms / Mn	Ma / Mn	J_m x 10^{-4}	IM B5	Mod	Mb	Z_o 1/h		J_m x 10^{-4}	IM B5	Mod	Mb	Z_o 1/h	J_m x 10^{-4}	IM B5	Mod	Mb	Z_o 1/h	J_m x 10^{-4}	IM B5
kW		min^{-1}	Nm		%	%	%		A				kgm^2	Kg		Nm	NB	SB	kgm^2	Kg		Nm	SB	kgm^2	Kg		Nm		kgm^2	Kg
0.09	**M 05A 6**	880	0.98	○	41.0	41.0	32.9	0.53	0.60	2.1	2.1	1.8	3.4	4.3	**FD 02**	3.5	9000	14000	4.0	6.0	**AFD 02**	3.5	14000	4.0	5.8	**FA 02**	3.5	14000	4.0	5.8
0.12	**M 05B 6**	870	1.32	○	45.0	44.0	41.8	0.60	0.64	2.1	1.9	1.7	3.7	4.6	**FD 02**	3.5	9000	14000	4.3	6.3	**AFD 02**	3.5	14000	4.3	6.1	**FA 02**	3.5	14000	4.3	6.1
0.18	**M 1SC 6**	900	1.91	○	55.0	55.5	51.0	0.69	0.68	2.6	1.9	1.7	8.4	5.1	**FD 03**	5	8100	13500	9.5	7.8	**AFD 03**	5	13500	9.5	7.5	**FA 03**	5	13500	9.5	7.5
0.25	**M 1SD 6**	900	2.7	○	62.0	58.5	51.4	0.71	0.82	2.6	1.9	1.7	10.9	6.3	**FD 03**	5	7800	13000	12	9.0	**AFD 03**	7.5	13000	12	8.7	**FA 03**	5	13000	12	8.7
0.37	**M 1LA 6**	910	3.9	○	66.0	60.0	53.3	0.69	1.17	3.0	2.4	2.0	12.9	7.3	**FD 53**	7.5	5100	9500	14	10.0	**AFD 03**	7.5	9500	14	9.7	**FA 03**	7.5	9500	14	9.7
0.55	**M 2SA 6**	920	5.7	○	70.0	69.8	64.3	0.68	1.67	3.9	2.6	2.2	25	10.6	**FD 04**	15	4800	7200	27	14.5	**AFD 04**	15	7200	27	14.1	**FA 04**	15	7200	27	14.4
0.75	**M 2SB 6**	920	7.8	•	70.0	70.0	64.4	0.65	2.38	3.8	2.5	2.2	28	11.5	**FD 04**	15	3400	6400	30	15.4	**AFD 04**	15	6400	30	15	**FA 04**	15	6400	30	15.3
1.1	**M 3SA 6**	920	11.4	•	75.0	74.0	72.0	0.72	2.9	4.3	2.0	1.8	33	17	**FD 15**	26	2700	5000	37	23	**AFD 15**	26	5000	37	22.4	**FA 15**	26	5000	37	24
1.5	**M 3LA 6**	940	15.2	•	75.2	74.2	70.3	0.72	4.0	4.1	2.1	2.0	82	21	**FD 15**	40	1900	4100	86	27	**AFD 15**	40	4100	86	26	**FA 15**	40	4100	86	28
1.85	**M 3LB 6**	930	19.0	•	76.6	72.8	62.6	0.73	4.8	4.6	2.1	2.0	95	23	**FD 15**	40	1700	3600	99	29	**AFD 15**	40	3600	99	28	**FA 15**	40	3600	99	30
2.2	**M 3LC 6**	930	23	•	77.7	76.8	72.4	0.71	5.8	4.7	2.3	2.1	95	23	**FD 55**	55	—	1900	99	29	—	—	—	—	—	**FA 15**	55	1900	99	30
3	**M 4SA 6**	940	30	•	79.7	77.0	75.1	0.76	7.1	5.1	1.9	1.8	216	34	**FD 56**	75	—	1400	226	47	**AFD 06**	75	1400	226	46	**FA 06**	75	1400	226	48
4	**M 4LA 6**	950	40	•	81.4	81.5	79.5	0.77	9.2	5.5	2.0	1.8	295	43	**FD 06**	100	—	1200	305	56	**AFD 06**	100	1200	305	55	**FA 07**	100	1200	305	57
5.5	**M 4LB 6**	945	56	•	83.1	80.9	79.1	0.78	12.2	6.1	2.1	1.9	383	54	**FD 07**	150	—	1050	406	70	**AFD 07**	150	1050	406	68	**FA 07**	150	1050	406	72
7.5	**M 5SA 6**	955	75	•	85.0	85.0	84.8	0.81	15.7	5.9	2.2	2.0	740	69	**FD 08**	170	—	900	815	98						**FA 08**	170	900	800	98
11	**M 5SB 6**	960	109	•	86.4	86.5	85.9	0.81	22.7	6.6	2.5	2.3	970	89	**FD 08**	200	—	800	1045	119						**FA 08**	200	800	1030	118

○ = n.a. • = IE1

2/4P — 3000/1500 min^{-1} - S1 — 50 Hz

												d.c. brake						c.c. brake with fixed air gap					a.c. brake				
												FD						AFD					FA				
P_n kW		n min^{-1}	M_n Nm	η %	cosφ	In 400V A	Is/In	Ms/Mn	Ma/Mn	J_m x 10^{-4} kgm^2	IM B5 Kg	Mod	Mb Nm	Z_o 1/h NB	Z_o 1/h SB	J_m x 10^{-4} kgm^2	IM B5 Kg	Mod	Mb Nm	Z_o 1/h SB	J_m x 10^{-4} kgm^2	IM B5 Kg	Mod	Mb Nm	Z_o 1/h	J_m x 10^{-4} kgm^2	IM B5 Kg
0.20	M 05A 2	2700	0.71	55	0.82	0.64	3.5	2.1	1.9	2.9	4.1	FD 02	3.5	2200	2600	3.5	5.8	AFD 02	3.5	2600	3.5	5.6	FA 02	3.5	2600	3.5	5.6
0.15	4	1350	1.06	49	0.67	0.66	2.6	1.8	1.7					4000	5100					5100					5100		
0.28	M 1SB 2	2700	0.99	56	0.82	0.88	2.9	1.9	1.7	4.7	4.0	FD 03	3.5	2100	2400	5.8	6.7	AFD 03	5	2400	5.8	6.4	FA 03	3.5	2400	5.8	6.4
0.20	4	1370	1.39	59	0.68	1.02	3.1	1.8	1.7					3800	4800					4800					4800		
0.37	M 1SC 2	2740	1.29	56	0.82	1.16	3.5	1.8	1.8	5.8	4.7	FD 03	5	1400	2100	6.9	7.4	AFD 03	5	2100	6.9	7.1	FA 03	5	2100	6.9	7.1
0.25	4	1390	1.72	60	0.73	0.82	3.3	2.0	1.9					2900	4200					4200					4200		
0.45	M 1SD 2	2780	1.55	63	0.85	1.21	3.8	1.8	1.8	6.9	5.5	FD 03	5	1400	2100	8.0	8.2	AFD 03	5	2100	8.0	7.9	FA 03	5	2100	8.0	7.9
0.30	4	1400	2.0	63	0.74	0.93	3.8	2.1	1.9					2900	4200					4200					4200		
0.55	M 1LA 2	2800	1.9	73	0.79	1.38	4.2	2.0	1.8	9.1	6.9	FD 03	5	1600	2200	10.2	9.6	AFD 03	5	2200	10.2	9.3	FA 03	5	2200	10.2	9.3
0.37	4	1400	2.5	68	0.72	1.09	3.9	2.2	2.0					3300	4600					4600					4600		
0.75	M 2SA 2	2780	2.6	65	0.85	1.96	3.8	1.9	1.8	20	9.2	FD 04	10	1400	1600	22	13.1	AFD 04	10	1600	22	12.7	FA 04	10	1600	22	13.0
0.55	4	1400	3.8	68	0.81	1.44	3.9	1.7	1.7					2700	3600					3600					3600		
1.1	M 2SB 2	2730	3.9	65	0.86	2.84	3.9	2.0	1.9	25	10.7	FD 04	10	1200	1500	27	14.5	AFD 04	10	1500	27	14.1	FA 04	10	1500	27	14.5
0.75	4	1410	5.1	75	0.81	1.78	4.5	2.1	2.0					2300	3100					3100					3100		
1.5	M 3SA 2	2830	5.1	74	0.83	3.5	4.7	2.1	2.0	34	15.5	FD 15	26	700	1000	38	22	AFD 15	26	1000	38	21.4	FA 15	26	1000	38	23
1.1	4	1420	7.4	77	0.78	2.6	4.3	2.1	2.0					1600	2600					2600					2600		
2.2	M 3LA 2	2800	7.5	72	0.85	5.2	4.5	2.0	1.9	40	17	FD 15	26	600	900	44	24	AFD 15	26	900	44	23.4	FA 15	26	900	44	24
1.5	4	1410	10.2	73	0.79	3.8	4.7	2.0	2.0					1300	2300					2300					2300		
3.5	M 3LB 2	2850	11.7	80	0.84	7.5	5.4	2.2	2.1	61	23	FD 15	40	500	900	65	29	AFD 15	40	900	65	28	FA 15	40	900	65	30
2.5	4	1420	16.8	82	0.80	5.5	5.2	2.2	2.2					1000	2100					2100					2100		
4.8	M 4 SA 2	2900	15.8	81	0.88	9.7	6.0	2.0	1.9	213	42	FD 06	50	—	400	233	55	AFD 06	62	400	233	54	FA 06	50	400	233	56
3.8	4	1430	25.4	81	0.84	8.1	5.2	2.1	2.1					—	950					950					950		
5.5	M 4SB 2	2890	18.2	80	0.87	11.4	5.9	2.4	2.0	213	42	FD 56	75	—	350	223	55	AFD 06	75	350	223	54	FA 06	75	350	223	56
4.4	4	1440	29	82	0.84	9.2	5.3	2.2	2.0					—	900					900					900		
7.5	M 4LA 2	2900	25	82	0.87	15.2	6.5	2.4	2.0	270	51	FD 06	100	—	350	280	64	AFD 06	100	350	280	63	FA 07	100	350	280	65
6	4	1430	40	84	0.85	12.1	5.8	2.3	2.1					—	950					950					950		
9.2	M 4LB 2	2920	30	83	0.86	18.6	6.0	2.6	2.2	319	57	FD 07	150	—	300	342	73	AFD 07	150	300	342	71	FA 07	150	300	342	75
7.3	4	1440	48	85	0.85	14.6	5.5	2.3	2.1					—	800					800					800		



2/6P — 3000/1000 min^{-1} - S3 60/40% — 50 Hz

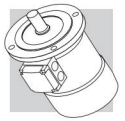

												d.c. brake						c.c. brake with fixed air gap					a.c. brake				
												FD						AFD					FA				
P_n kW		n min^{-1}	M_n Nm	η %	cosφ	In 400V A	Is / In	Ms / Mn	Ma / Mn	J_m x 10^{-4} kgm^2	IM B5 Kg	Mod	Mb Nm	Z_o 1/h NB	Z_o 1/h SB	J_m x 10^{-4} kgm^2	IM B5 Kg	Mod	Mb Nm	Z_o 1/h SB	J_m x 10^{-4} kgm^2	IM B5 Kg	Mod	Mb Nm	Z_o 1/h	J_m x 10^{-4} kgm^2	IM B5 Kg
0.25	M 1SA 2	2850	0.84	60	0.82	0.73	4.3	1.9	1.8	6.9	5.5	FD 03	1.75	1500	1700	8.0	8.2	AFD 03	2.5	1700	8.0	7.9	FA 03	1.75	1700	8.0	7.9
0.08	6	910	0.84	43	0.70	0.38	2.1	1.4	1.5					10000	13000					13000					13000		
0.37	M 1LA 2	2880	1.23	62	0.80	1.08	4.4	1.9	1.8	9.1	6.9	FD 03	3.5	1000	1300	10.2	9.6	AFD 03	5	1300	10.2	9.3	FA 03	3.5	1300	10.2	9.3
0.12	6	900	1.27	44	0.73	0.54	2.4	1.4	1.5					9000	11000					11000					11000		
0.55	M 2SA 2	2800	1.88	63	0.86	1.47	4.5	1.9	1.7	20	9.2	FD 04	5	1500	1800	22	13.1	AFD 04	5	1800	22	12.7	FA 04	5	1800	22	13.0
0.18	6	930	1.85	52	0.65	0.77	3.3	2.0	1.9					4100	6300					6300					6300		
0.75	M 2SB 2	2800	2.6	66	0.87	1.89	4.3	1.8	1.6	25	10.6	FD 04	5	1700	1900	27	14.5	AFD 04	5	1900	27	14.1	FA 04	5	1900	27	14.4
0.25	6	930	2.6	54	0.67	1.00	3.2	1.7	1.8					3800	6000					6000					6000		
1.1	M 3SA 2	2870	3.7	71	0.82	2.73	4.9	1.8	1.9	34	15.5	FD 15	13	1000	1300	38	22	AFD 15	13	1300	38	21.4	FA 15	13	1300	38	23
0.37	6	930	3.8	63	0.70	1.21	3.1	1.5	1.8					3500	5000					5000					5000		
1.5	M 3LA 2	2880	5.0	73	0.84	3.53	5.1	1.9	2.0	40	17	FD 15	13	1000	1200	44	24	AFD 15	13	1200	44	23.4	FA 15	13	1200	44	24
0.55	6	940	5.6	64	0.67	1.85	3.5	1.7	1.8					2900	4000					4000					4000		
2.2	M 3LB 2	2900	7.2	77	0.85	4.9	5.9	2.0	2.0	61	23	FD 15	26	700	900	65	29	AFD 15	26	900	65	28	FA 15	26	900	65	30
0.75	6	950	7.5	67	0.64	2.5	3.3	1.9	1.8					2100	3000					3000					3000		
3	M 4SA 2	2910	9.9	74	0.88	6.6	5.6	2.0	2.1	170	36	FD 56	37	—	600	182	48	AFD 06	37	600	182	47	FA 06	37	600	182	50
1.1	6	960	10.9	73	0.68	3.2	4.5	2.2	2.0					—	2200					2200					2200		
4.5	M 4SB 2	2910	14.8	78	0.84	9.9	5.8	1.9	1.8	213	42	FD 56	37	—	500	223	55	AFD 06	37	500	223	54	FA 06	37	500	223	56
1.5	6	960	14.9	74	0.67	4.4	4.2	1.9	2.0					—	2100					2100					2100		
5.5	M 4LA 2	2920	18.0	78	0.87	11.7	6.2	2.1	1.9	270	51	FD 06	50	—	400	280	64	AFD 06	62	400	280	63	FA 06	50	400	280	65
2.2	6	960	22	77	0.71	5.8	4.3	2.1	2.0					—	1900					1900					1900		

2/8P — 3000/750 min^{-1} - S3 60/40% — 50 Hz

												d.c. brake						c.c. brake with fixed air gap					a.c. brake				
												FD						AFD					FA				
P_n kW		n min^{-1}	M_n Nm	η %	cosφ	In 400V A	Is / In	Ms / Mn	Ma / Mn	J_m x 10^{-4} kgm^2	IM B5 Kg	Mod	Mb Nm	Z_o 1/h NB	Z_o 1/h SB	J_m x 10^{-4} kgm^2	IM B5 Kg	Mod	Mb Nm	Z_o 1/h SB	J_m x 10^{-4} kgm^2	IM B5 Kg	Mod	Mb Nm	Z_o 1/h	J_m x 10^{-4} kgm^2	IM B5 Kg
0.37	M 1LA 2	2800	1.26	63	0.86	0.99	3.9	1.8	1.9	12.9	7.3	FD 03	3.5	1200	1300	14	10.0	AFD 03	5	1300	14	9.7	FA 03	3.5	1300	14	9.7
0.09	8	670	1.28	34	0.75	0.51	1.8	1.4	1.5					9500	13000					13000					13000		
0.55	M 2SA 2	2830	1.86	66	0.86	1.40	4.4	2.1	2.0	20	9.2	FD 04	5	1500	1800	22	13.1	AFD 04	5	1800	22	12.7	FA 04	5	1800	22	13.0
0.13	8	690	1.80	41	0.64	0.72	2.3	1.6	1.7					5600	8000					8000					8000		
0.75	M 2SB 2	2800	2.6	68	0.88	1.81	4.6	2.1	2.0	25	10.6	FD 04	10	1700	1900	27	14.5	AFD 04	10	1900	27	14.1	FA 04	10	1900	27	14.4
0.18	8	690	2.5	43	0.66	0.92	2.3	1.6	1.7					4800	7300					7300					7300		
1.1	M 3SA 2	2870	3.7	69	0.84	2.74	4.6	1.8	1.7	34	15.5	FD 15	13	1000	1300	38	22	AFD 15	13	1300	38	21.4	FA 15	13	1300	38	23
0.28	8	690	3.9	44	0.56	1.64	2.3	1.4	1.7					3400	5000					5000					5000		
1.5	M 3LA 2	2880	5.0	69	0.85	3.69	4.7	1.9	1.8	40	17	FD 15	13	1000	1200	44	24	AFD 15	13	1200	44	23.4	FA 15	13	1200	44	24
0.37	8	690	5.1	46	0.63	1.84	2.1	1.6	1.6					3300	5000					5000					5000		
2.4	M 3LB 2	2900	7.9	75	0.82	5.6	5.4	2.1	2.0	61	23	FD 15	26	550	700	65	29	AFD 15	26	700	65	28	FA 15	26	700	65	30
0.55	8	700	7.5	54	0.58	2.5	2.6	1.8	1.8					2000	3500					3500					3500		
3	M 4SA 2	2920	9.8	72	0.85	7.1	5.6	2.0	1.8	162	36	FD 56	37	—	600	182	48	AFD 06	37	600	182	47	FA 06	37	600	182	50
0.75	8	710	10.1	61	0.64	2.8	3.0	1.7	1.8					—	3400					3400					3400		
4	M 4SB 2	2870	13.3	73	0.84	9.4	5.6	2.3	2.4	213	42	FD 56	37	—	500	223	55	AFD 06	37	500	223	54	FA 06	37	500	223	56
1	8	690	13.8	66	0.62	3.5	2.9	1.9	1.8					—	3500					3500					3500		
5.5	M 4LA 2	2870	18.3	75	0.84	12.6	6.1	2.4	2.5	270	51	FD 06	50	—	400	280	64	AFD 06	62	400	280	63	FA 06	50	400	280	65
1.5	8	690	21	68	0.63	5.1	2.9	1.9	1.9					—	2400					2400					2400		



2/12P — 3000/500 min^{-1} - S3 60/40% — 50 Hz

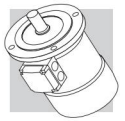

												d.c. brake						c.c. brake with fixed air gap					a.c. brake				
												FD						AFD					FA				
P_n kW		n min^{-1}	M_n Nm	η %	cosφ	In 400V A	Is / In	Ms / Mn	Ma / Mn	J_m x 10^{-4} kgm^2	IM B5 Kg	Mod	Mb Nm	Z_o 1/h NB	Z_o 1/h SB	J_m x 10^{-4} kgm^2	IM B5 Kg	Mod	Mb Nm	Z_o 1/h SB	J_m x 10^{-4} kgm^2	IM B5 Kg	Mod	Mb Nm	Z_o 1/h	J_m x 10^{-4} kgm^2	IM B5 Kg
0.55	**M 2SA 2**	2820	1.86	64	0.89	1.39	4.2	1.6	1.7	25	10.6	**FD 04**	5	1000	1300	27	14.5	**AFD 04**	5	1300	27	14.1	**FA 04**	5	1300	27	14.4
0.09	**12**	430	2.0	30	0.63	0.69	1.8	1.9	1.8					8000	12000					12000					12000		
0.75	**M 3SA 2**	2900	2.5	65	0.81	2.06	5.2	1.9	2.1	34	15.5	**FD 15**	13	700	900	38	22	**AFD 15**	13	900	38	21.4	**FA 15**	13	900	38	23
0.12	**12**	460	2.5	33	0.43	1.22	1.9	1.3	1.6					5000	7000					7000					7000		
1.1	**M 3LA 2**	2850	3.7	65	0.85	2.87	4.5	1.6	1.8	40	17	**FD 15**	13	700	900	44	24	**AFD 15**	13	900	44	23.4	**FA 15**	13	900	44	24
0.18	**12**	430	4.0	26	0.54	1.85	1.5	1.3	1.5					4000	6000					6000					6000		
1.5	**M 3LB 2**	2900	4.9	67	0.86	3.76	5.6	1.9	1.9	54	21	**FD 15**	13	700	900	58	27	**AFD 15**	13	900	58	26	**FA 15**	13	900	58	28
0.25	**12**	440	5.4	36	0.46	2.18	1.8	1.7	1.8					3800	5000					5000					5000		
2	**M 3LC 2**	2850	6.7	70	0.84	4.9	4.9	1.8	1.7	61	23	**FD 55**	18	—	700	65	29	**AFD 15**	26	700	65	28	**FA 15**	18	700	65	30
0.3	**12**	450	6.4	38	0.47	2.4	1.7	1.6	1.7					—	3500					3500					3500		
3	**M 4SA 2**	2920	9.8	74	0.87	6.7	6.8	2.3	1.9	213	42	**FD 56**	37	—	450	223	55	**AFD 06**	37	450	223	54	**FA 06**	37	450	223	56
0.5	**12**	470	10.2	51	0.43	3.3	2.0	1.7	1.6					—	3000					3000					3000		
4	**M 4LA 2**	2920	13.1	75	0.89	8.6	5.9	2.4	2.3	270	51	**FD 56**	37	—	400	280	64	**AFD 06**	37	400	280	63	**FA 06**	37	400	280	65
0.7	**12**	460	14.5	53	0.44	4.3	1.9	1.7	1.6					—	2800					2800					2800		

BN - IM B5

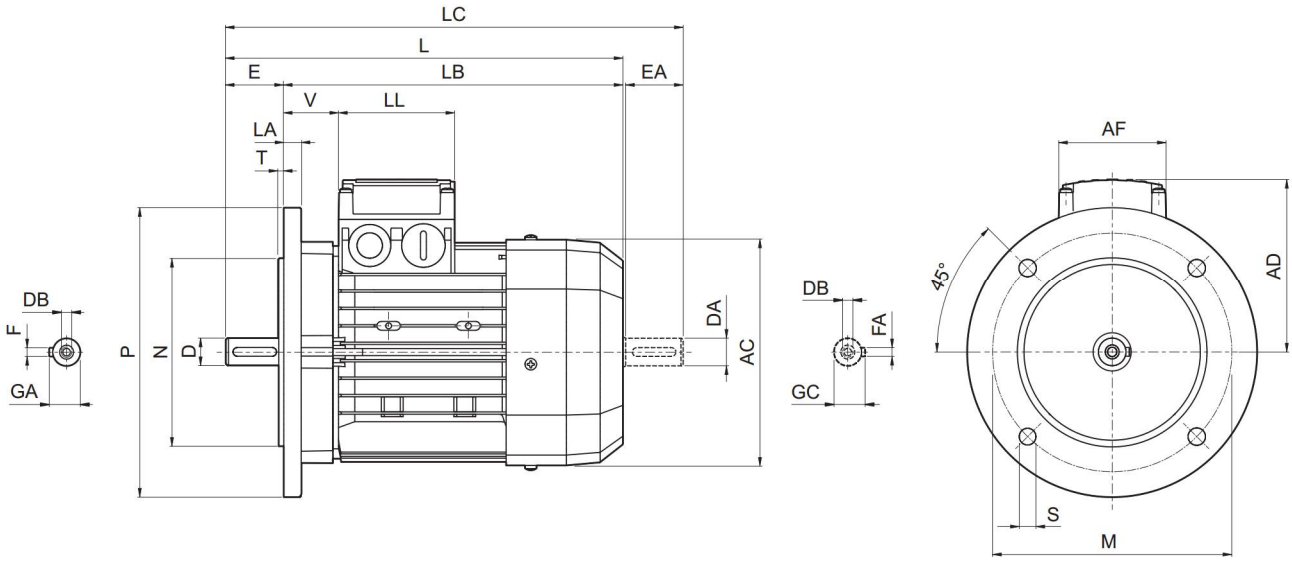

	Shaft					Flange						Motor							
	D DA	E EA	DB	GA GC	F FA	M	N	P	S	T	LA	AC	L	LB	LC	AD	AF	LL	V
BN 56	9	20	M3	10.2	3	100	80	120	7	3	8	110	185	165	207	91	74	80	34
BN 63	11	23	M4	12.5	4	115	95	140	9.5		10	121	207	184	232	95			26
BN 71	14	30	M5	16	5	130	110	160		3.5		138	249	219	281	108			37
BN 80	19	40	M6	21.5	6	165	130	200	11.5		11.5	156	274	234	315	119			38
BN 90	24	50	M8	27	8							176	326	276	378	133	98	98	44
BN 100	28	60	M10	31		215	180	250	14	4	14	195	367	307	429	142			50
BN 112											15	219	385	325	448	157			52
BN 132	38	80	M12	41	10	265	230	300			16	258	493	413	576	193	118	118	58
BN 160 MR	42 38 (1)	110 80 (1)	M16 M12 (1)	45 41 (1)	12 10 (1)	300	250	350	18.5	5	15		562	452	645				218
BN 160 M												310	596	486	680	245	187	187	51
BN 160 L																			
BN 180 M	48 38 (1)	110 110 (1)	M16 M12 (1)	51.5 41 (1)	14 10 (1)							310	640	530	724				
BN 180 L	48 42 (1)		M16 M16 (1)	51.5 45 (1)	14 12 (1)						18	348	708	598	823	261			52
BN 200 L	55 42 (1)		M20 M16 (1)	59 45 (1)	16 12 (1)	350	300	400					722	612	837				66

NOTE:
1) These values refer to the rear shaft end.



BN - IM B14

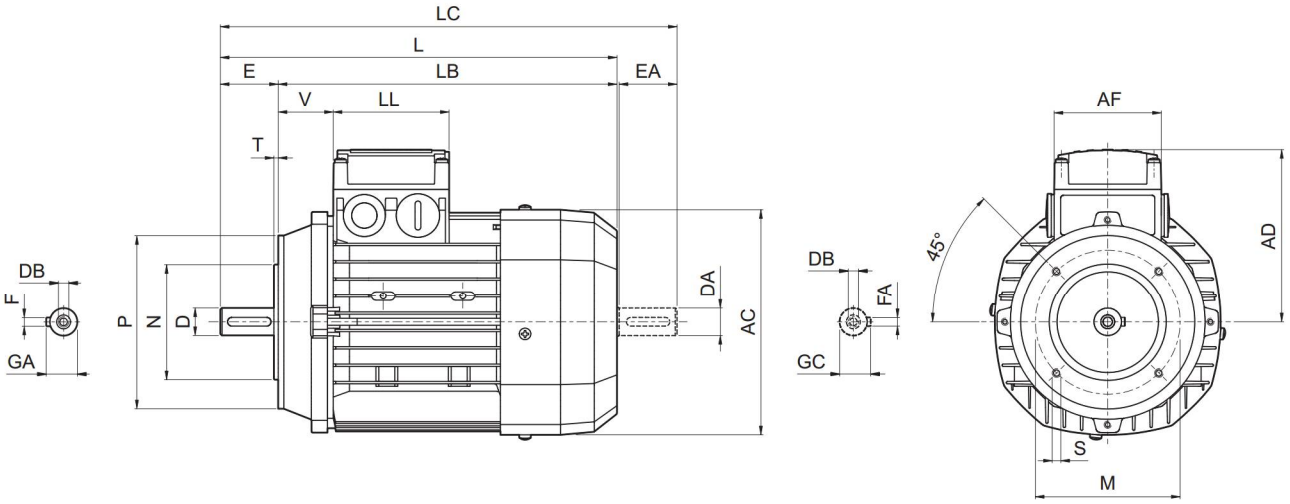

	Shaft					Flange					Motor							
	D DA	**E EA**	**DB**	**GA GC**	**F FA**	**M**	**N**	**P**	**S**	**T**	**AC**	**L**	**LB**	**LC**	**AD**	**AF**	**LL**	**V**
BN 56	9	20	M3	10.2	3	65	50	80	M5	2.5	110	185	165	207	91	74	80	34
BN 63	11	23	M4	12.5	4	75	60	90			121	207	184	232	95			26
BN 71	14	30	M5	16	5	85	70	105	M6		138	249	219	281	108			37
BN 80	19	40	M6	21.5	6	100	80	120		3	156	274	234	315	119			38
BN 90	24	50	M8	27	8	115	95	140	M8		176	326	276	378	133	98	98	44
BN 100	28	60	M10	31		130	110	160		3.5	195	367	307	429	142			50
BN 112											219	385	325	448	157			52
BN 132	38	80	M12	41	10	165	130	200	M10	4	258	493	413	576	193	118	118	58

BN_FD ; BN_AFD - IM B5

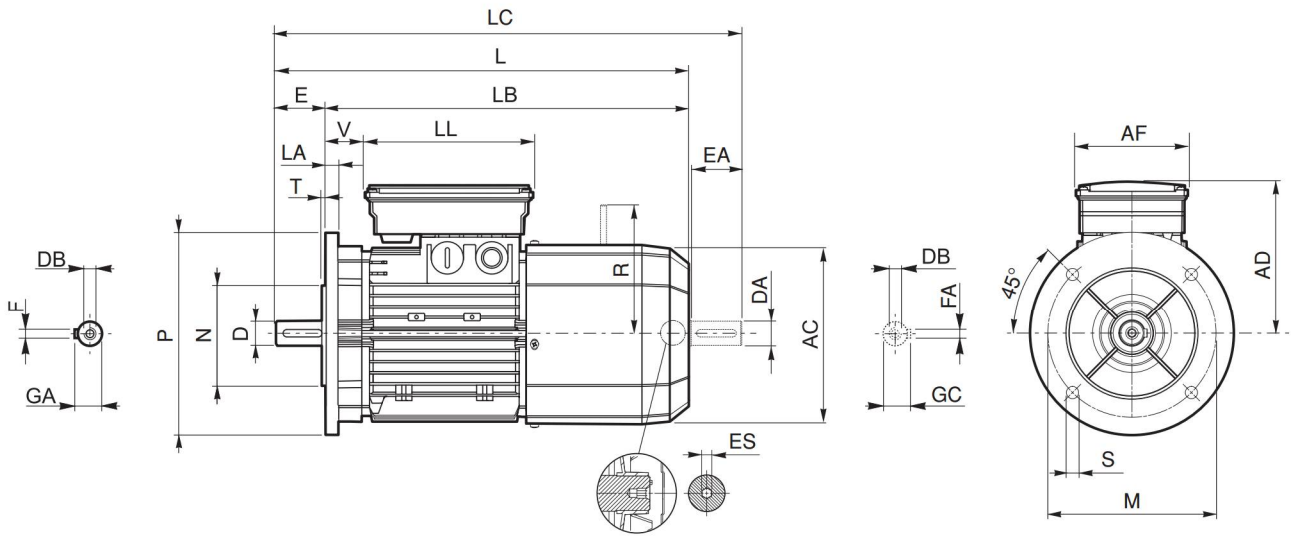

	Shaft					Flange						Motor									
	D DA	E EA	DB	GA GC	F FA	M	N	P	S	T	LA	AC	L	LB	LC	AD	AF	LL	V	R	ES
BN 63	11	23	M4	12.5	4	115	95	140	9.5	3	10	121	272	249	297	122	98	133	14	96	5
BN 71	14	30	M5	16	5	130	110	160	9.5	3.5		138	310	280	342	135			25	103	
BN 80	19	40	M6	21.5	6	165	130	200	11.5		11.5	156	346	306	388	146			41	129	
BN 90 S	24	50	M8	27	8							176	409	359	461	149	110	165	39		6
BN 90 L																146				160	
BN 100	28	60	M10	31		215	180	250	14	4	14	195	458	398	521	158		165	62		
BN 112											15	219	484	424	547	173		165	73	199	
BN 132	38	80	M12	41	10	265	230	300			20	258	603	523	686	210	140	188	46	204 (2)	
BN 160 MR	42 38 (1)	110 80 (1)	M16 M12 (1)	45 41 (1)	12 10 (1)	300	250	350	18.5	5	15		672	562	755				161	226	
BN 160 M												310	736	626	820	245	187	187	51	266	—
BN 160 L	42 38 (1)	110 80 (1)	M16 M12 (1)	45 41 (1)	12 10 (1)								780	670	864						
BN 180 M	48 38 (1)			51.5 41 (1)	14 10 (1)								866	756	981				52		
BN 180 L	48 42 (1)	110 110 (1)	M16 M16 (1)	51.5 45 (1)	14 12 (1)						18	348	878	768	993	261			64	305	
BN 200 L	55 42 (1)		M20 M16 (1)	59 45 (1)	16 12 (1)	350	300	400	18.5												

NOTE:
1) These values refer to the rear shaft end.
2) Per freno FD07 e AFD07 quota R=226.

ES hexagon is not supplied with PS option.

BN_FD ; BN_AFD - IM B14

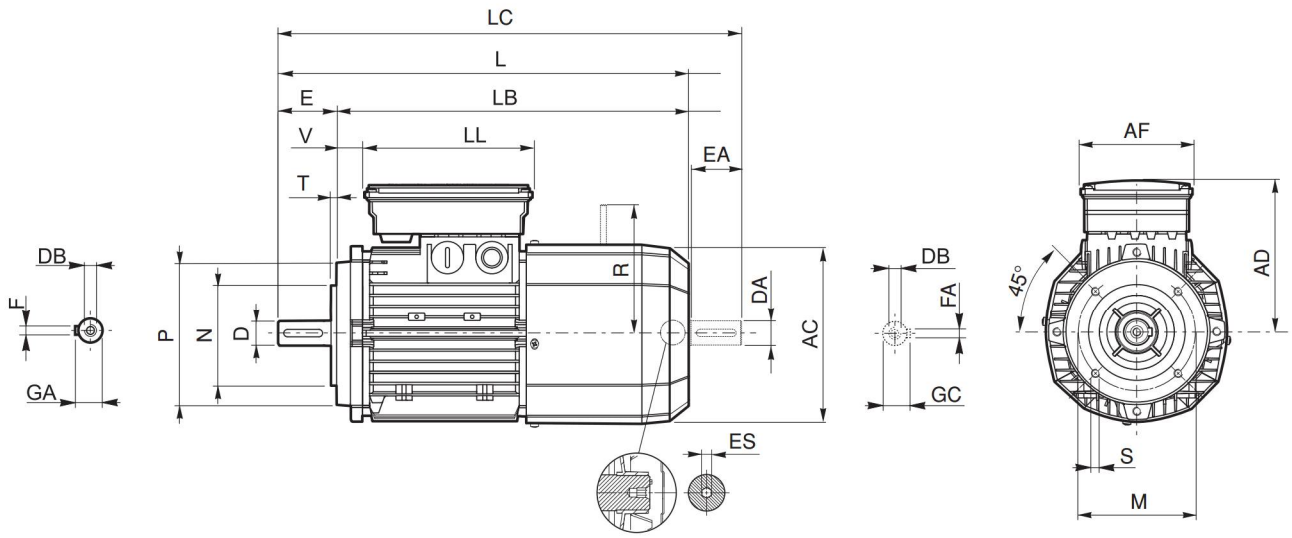

	Shaft					Flange					Motor									
	D DA	E EA	DB	GA GC	F FA	M	N	P	S	T	AC	L	LB	LC	AD	AF	LL	V	R	ES
BN 63	11	23	M4	12.5	4	75	60	90	M5	2.5	121	272	249	297	122	98	133	14	96	5
BN 71	14	30	M5	16	5	85	70	105	M6		138	310	280	342	135			25	103	
BN 80	19	40	M6	21.5	6	100	80	120		3	156	346	306	388	146			41	129	
BN 90 S	24	50	M8	27	8	115	95	140	M8		176	409	359	461	149	110	165	39	129	6
BN 90 L															146				160	
BN 100	28	60	M10	31		130	110	160		3.5	195	458	398	521	158			62		
BN 112											219	484	424	547	173			73	199	
BN 132	38	80	M12	41	10	165	130	200	M10	4	258	603	523	686	210	140	188	46	204 (1)	

NOTE:
1) For FD07 brake value R=226.

ES hexagon is not supplied with PS option.

BN_FA - IM B5

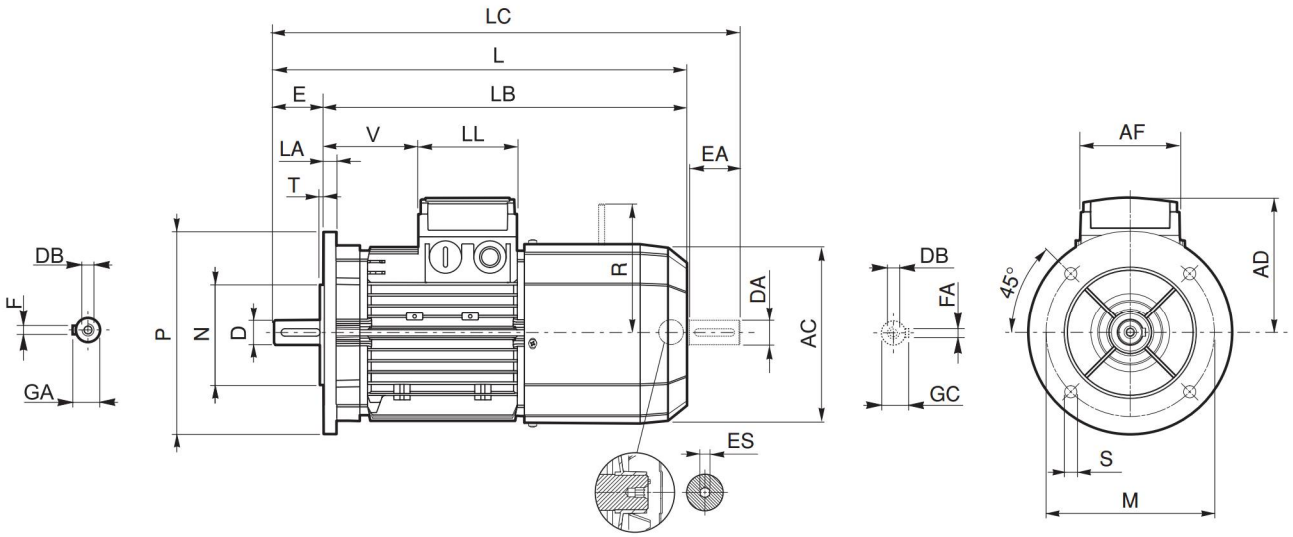

	Shaft					Flange						Motor									
	D DA	E EA	DB	GA GC	F FA	M	N	P	S	T	LA	AC	L	LB	LC	AD	AF	LL	V	R	ES
BN 63	11	23	M4	12.5	4	115	95	140	9.5	3	10	121	272	249	297	95	74	80	26	116	5
BN 71	14	30	M5	16	5	130	110	160				138	310	280	342	108			68	124	
BN 80	19	40	M6	21.5	6	165	130	200	11.5	3.5	11.5	156	346	306	388	119			83	134	
BN 90	24	50	M8	27	8							176	409	359	461	133	98	98	95	160	6
BN 100	28	60	M10	31		215	180	250	14	4	14	195	458	398	521	142			119		
BN 112											15	219	484	424	547	157			128	198	
BN 132	38	80	M12	41	10	265	230	300			20	258	603	523	686	210	140	188	46	200 (2)	
BN 160 MR	42 38 (1)	110 80 (1)	M16 M12 (1)	45 41 (1)	12 10 (1)	300	250	350	18.5	5	15		672	562	755	193	118	118	218	217	
BN 160 M												310	736	626	820	245	187	187	51	247	—
BN 160 L																					
BN 180 M				51.5 41 (1)	14 10 (1)								780	670	864						

NOTE:
1) These values refer to the rear shaft end.
2) Per freno FA07 quota R=217.

Dimensions AD, AF, LL and V, relevant to terminal box of motors BN…BA featuring the separate brake supply (option SA), are coincident with corresponding dimensions of same-size BN…FD and AFD motors

ES hexagon is not supplied with PS option.

BN_FA - IM B14

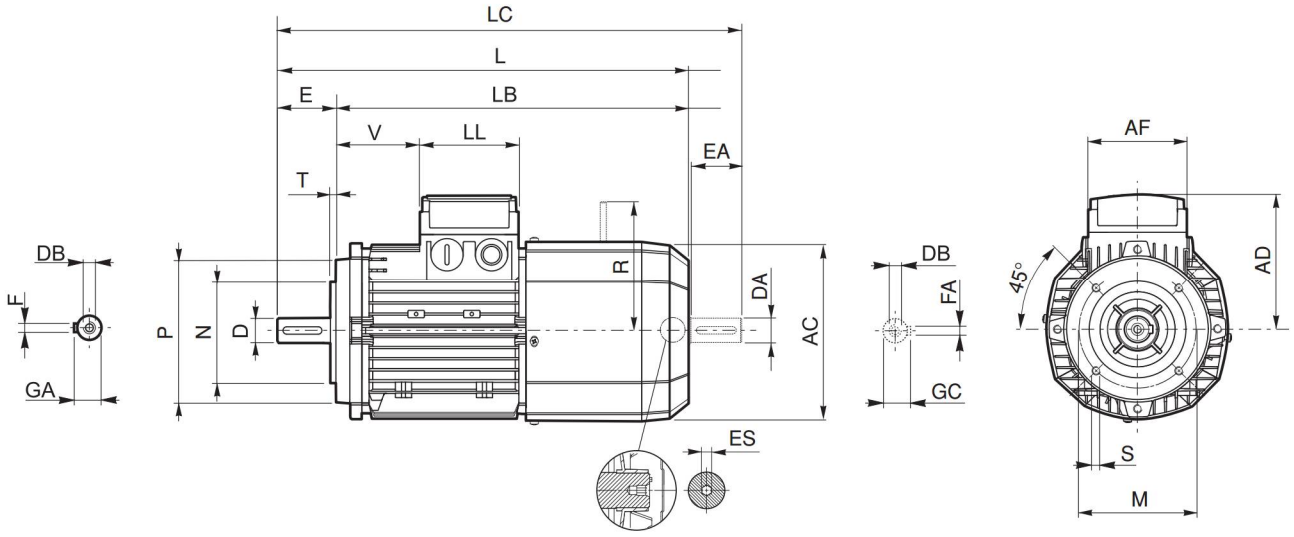

	Shaft					Flange					Motor									
	D DA	E EA	DB	GA GC	F FA	M	N	P	S	T	AC	L	LB	LC	AD	AF	LL	V	R	ES
BN 63	11	23	M4	12.5	4	75	60	90	M5	2.5	121	272	249	119	95	74	80	26	116	5
BN 71	14	30	M5	16	5	85	70	105	M6		138	310	280	342	108			68	124	
BN 80	19	40	M6	21.5	6	100	80	120		3	156	346	306	388	119			83	134	
BN 90	24	50	M8	27	8	115	95	140	M8		176	409	359	461	133	98	98	95	160	6
BN 100	28	60	M10	31		130	110	160		3.5	195	458	398	521	142			119		
BN 112											219	484	424	547	157			128	198	
BN 132	38	80	M12	41	10	165	130	200	M10	4	258	603	523	686	210	140	188	46	200 (1)	

NOTE:
1) For FA07 brake value R=217.

Dimensions AD, AF, LL and V, relevant to terminal box of motors BN…BA featuring the separate brake supply (option SA), are coincident with corresponding dimensions of same-size BN…FD and AFD motors

ES hexagon is not supplied with PS option.

M

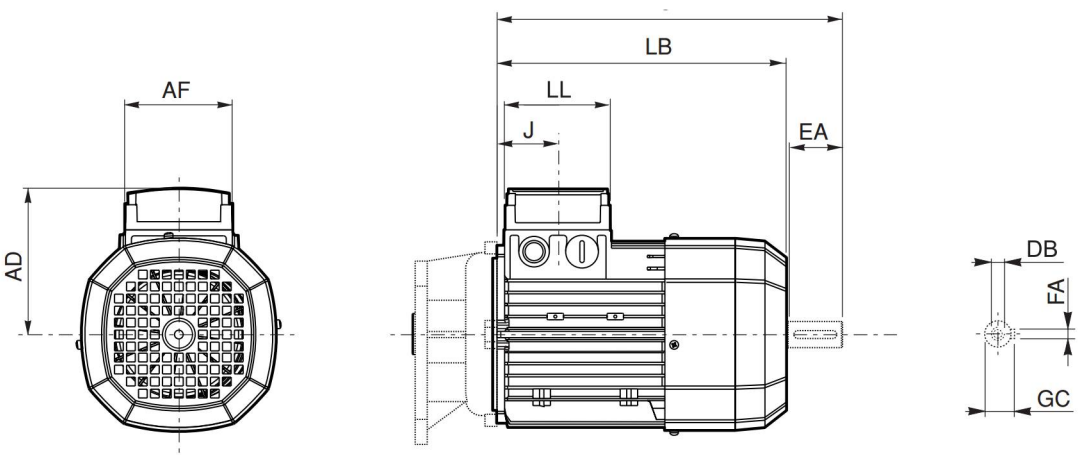

	Rear shaft end					Motor						
	DA	**EA**	**DB**	**FA**	**GC**	**AC**	**LB**	**LC**	**AF**	**LL**	**J**	**AD**
M 0	9	20	M3	3	10.2	110	133	155	74	80	42	91
M 05	11	23	M4	4	12.5	121	165	191			48	95
M 1	14	30	M5	5	16	138	187	219			45	108
M 2 S	19	40	M6	6	21.5	156	202	245			44	119
M 3 S	28	60	M10	8	31	195	230	293	98	98	53.5	142
M 3 L							262	325				
M 4	38	80	M12	10	41	258	361	444	118	118	64.5	193
M 4 LC							396	479				
M 5 S						310	418	502	187	187	77	245
M 5 L							462	546				

M_FD ; M_AFD

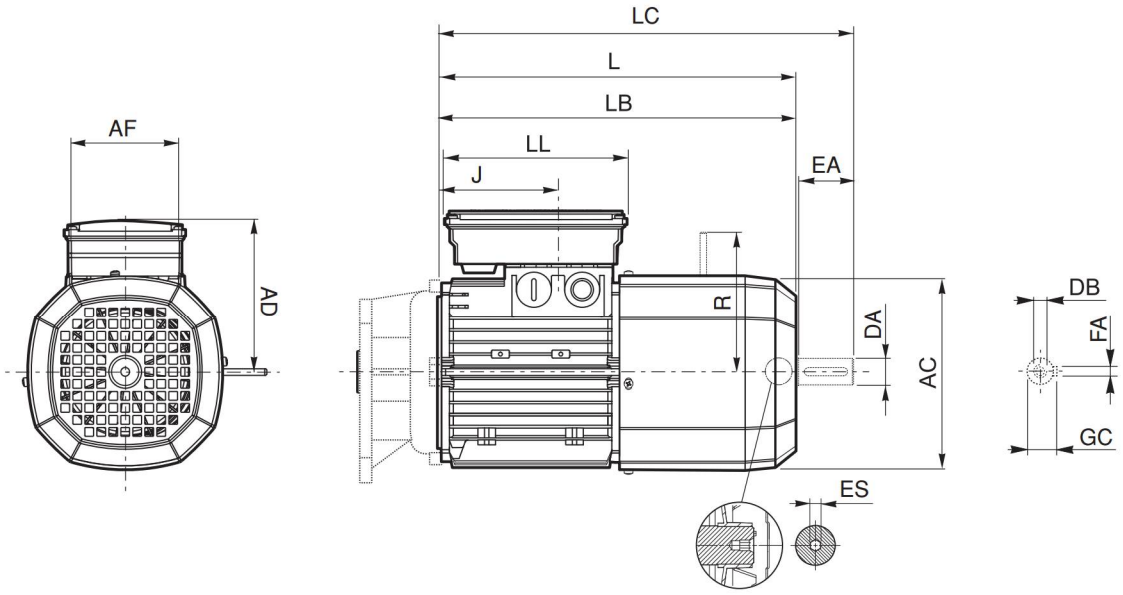

	Rear shaft end					Motor								
	DA	**EA**	**DB**	**FA**	**GC**	**AC**	**LB**	**LC**	**AF**	**LL**	**J**	**AD**	**R**	**ES**
M 05	11	23	M4	4	12.5	121	231	256	98	133	48	122	96	5
M 1	14	30	M5	5	16	138	248	280			73	135	103	
M 2 S	19	40	M6	6	21.5	156	272	314			88	146	129	
M 3 S	28	60	M10	8	31	195	326	389	110	165	124.5	158	160	6
M 3 L							353	416						
M 4	38	80	M12	10	41	258	470	553	140	188	185.5	210	204 (1)	
M 4 LC							495	578			64.5		226	
M 5 S						310	558	642	187	187	77	245	266	—
M 5 L							602	686						

NOTE:
1) For FD07 brake value R=226.

ES hexagon is not supplied with PS option.

M_FA

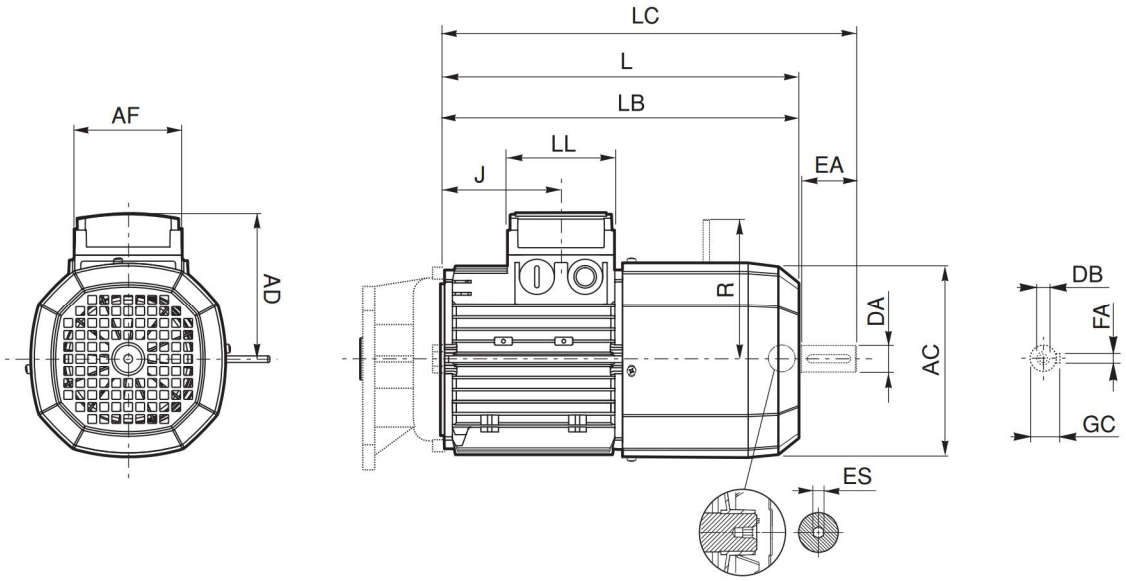

	Rear shaft end					Motor								
	DA	**EA**	**DB**	**FA**	**GC**	**AC**	**LB**	**LC**	**AF**	**LL**	**J**	**AD**	**R**	**ES**
M 05	11	23	M4	4	12.5	121	231	256	74	80	48	95	116	5
M 1	14	30	M5	5	16	138	248	280			73	108	124	
M 2 S	19	40	M6	6	21.5	156	272	314			88	119	134	
M 3 S	28	60	M10	8	31	195	326	389	98	98	124.5	142	160	6
M 3 L							353	416						
M 4	38	80	M14	10	41	258	470	553	140	188	185.5	210	200 (1)	
M 4 LC							495	578			64.5		217	
M 5 S			M12			310	558	642	187	187	77	245	247	—
M 5 L							602	686						

NOTE:
1) For FA07 brake value R=217.

Dimensions AD, AF, LL and V, relevant to terminal box of motors M…FA featuring the separate brake supply (option SA), are coincident with corresponding dimensions of same-size M…FD and AFD motors

ES hexagon is not supplied with PS option.

INDEX OF REVISIONS

BR_CAT_CAFS_STD_ENG_R04_0	
	Description
322…329	Added section “Helical bevel gear units Series A Atex configuration”.
512…579	Updated section “Electric Motors”.

2015 04 14

This publication supersedes and replaces any previous edition and revision. We reserve the right to implement modifications without notice.
This catalogue cannot be reproduced, even partially, without prior consent.

Bonfiglioli

power, control and green solutions

Bonfiglioli has been designing and developing innovative and reliable power transmission and control solutions for industry, mobile machinery and renewable energy applications since 1956.

HEADQUARTERS
Bonfiglioli Riduttori S.p.A.
Via Giovanni XXIII, 7/A
40012 Lippo di Calderara di Reno
Bologna (Italy)

tel: +39 051 647 3111
fax: +39 051 647 3126
bonfiglioli@bonfiglioli.com
www.bonfiglioli.com

BR_CAT_CAFS_STD_ENG_R04_0